Revision	Description	Revised	Date
A	FIRST RELEASE	CONNIE	20/Dec/2019

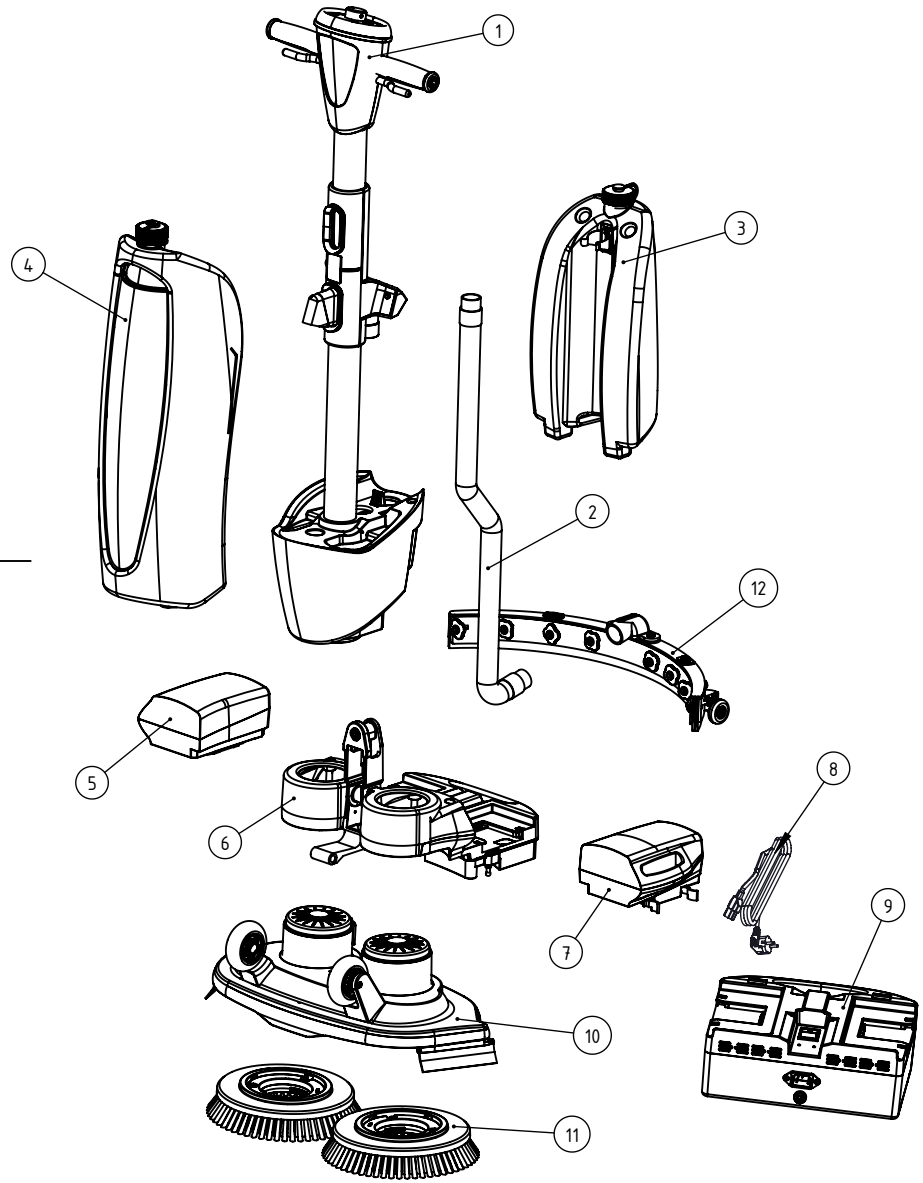

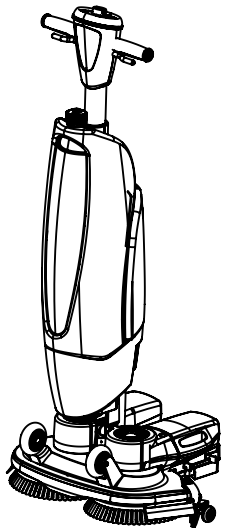

Item	P/N	Description	Qty.
1	TU.IMOP.230.21/797/0	ASSY TOP UNIT IMOPXL TIMER | BLUE BUTTON	1
2	S.72.0094.0	STRETCH HOSE COMPLETE	1
3	S.72.0081.1B	ASSY CLEAN COMPARMENT COMPLETE WITH FILLING HOSE	1
4	S.72.0088.2F	WHITE DIRT COMPARTMENT CAP TRANS LINE FLOAT BALL	1
5	S.72.0079.357BSRA	ASSY BATTERY PACK GREY [RIGHT] BMS 14Ah [FR][W/O FUSE]	1
6	S.72.0065.01	ASSY MAIN LEVER UNIT IMOPXL MERCURY SWITCH CATAFORESE BLAC	1
7	S.72.0074.357BSRA	ASSY BATTERY PACK GREY [LEFT] BMS 14Ah [FR][W/O FUSE]	1
8	72.0152.0	POWER CORD EUR 1.5 METER CB 3PIN	1
9	S.72.0344.3	IMOP BATTERY MCU CHARGER 3 PIN [9A] PSE+CB	1
10	BU.IMOP.230.36/00	ASSY BRUSH UNIT IMOP 24V SILVER CATAFORESE BLACK	1
11	S.72.0092.797/797	ASS BRUSH IMOP COMPLETE BLUE BRISTLE, BLUE LOCKER	2
12	S.72.0096.5	SQUEEGEE ASSEMBLY	1
13	72.0042.2099.00 NO SHOW	MANUAL IMOP [ENGLISH]	1
14	72.0042.2099.03 NO SHOW	MANUAL IMOP CHARGER [ENGLISH]	1
15	72.0142.11 NO SHOW	DAMP-PROOF BAG 30g	2

TOLERANCES UNSPECIFIED			
LINE		ANGLE	
.xxx	±0.005	x	±2°
.xx	±0.05	.x	±1.5°
.x	±0.1	.xx	±1°
.	±0.2	.xxx	±0.5°
xx	±0.5		
xxx	±1		

REMARK: –

MATERIAL: –

SMT-FCT DONGGUAN
THE FRIENDLY FAMILY
东莞硕能塑胶模具有限公司

ASSEMBLY AND MOULDING OF CLEANING

APPROVED	CHECKED	DISGNED	REV.	A	PART NAME	IMOPXLU.FCT.7 EXPLODED VIEW	FIRST ANGLE PROJECTION
		CONNIE	UNIT	mm	PART NO	IMOPXLU.FCT.7	SIZE
SHEET 1 OF 1	DATE	20/Dec/2019	SCALE		PROJECT		A4

Revision	Description	Revised	Date
A	FIRST RELEASE	CONNIE	20/Dec/2019

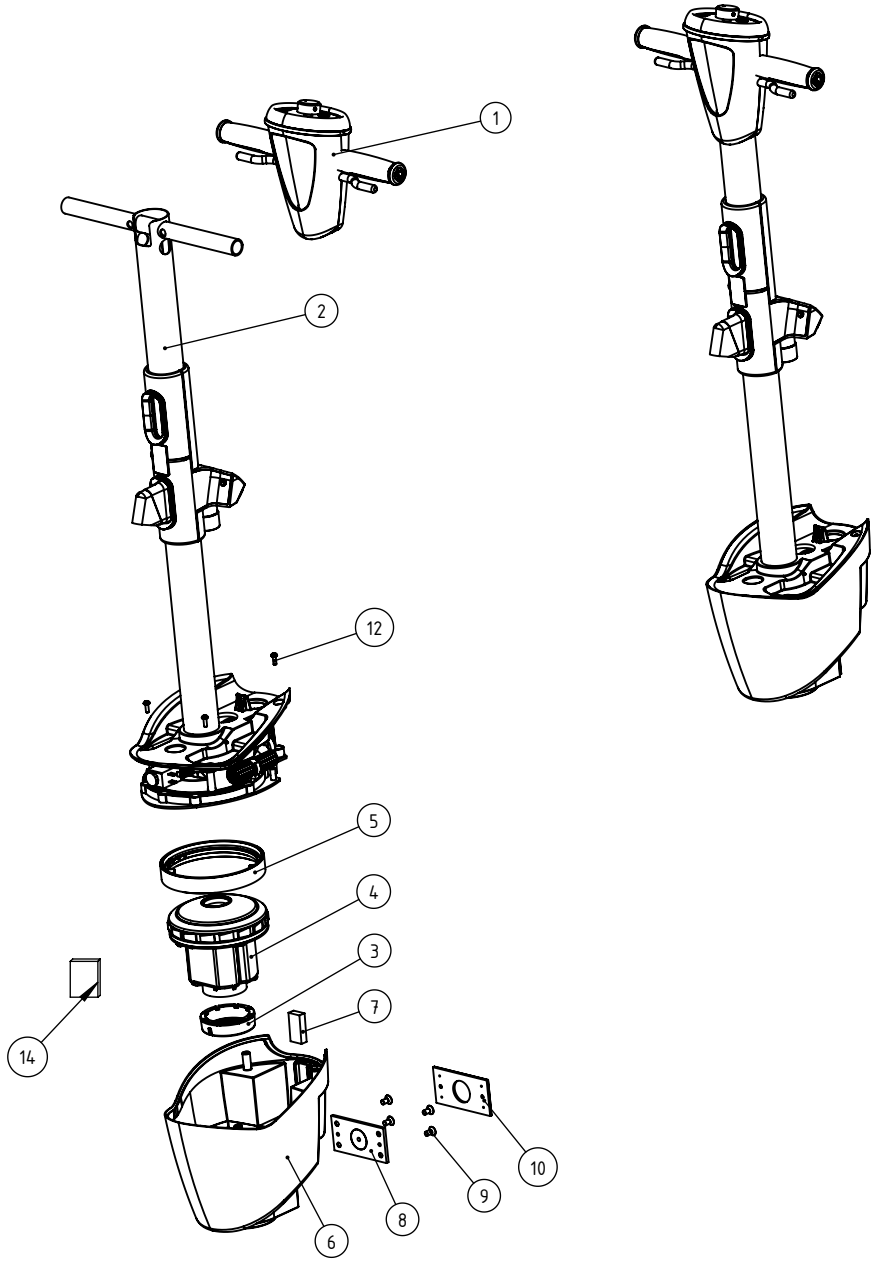

Item	P/N	Description	Qty.
	TU.IMOP.230.21/797/0	ASSY TOP UNIT IMOPXL TIMER BLUE BUTTON	
1	S.72.0064.2/797	ASSY CONTROL UNIT TIMER BLUE	1
2	S.72.0040.0	ASSY INLET TUBE [MCH 1416-1001-1024]	1
3	72.0034.0	VACUUM MOTOR SEALING BOTTOM [MCH 1416-1001-2047]	1
4	72.0035.0	DOMEL VACUUM CLEANER MOTOR [69.0007.0]	1
5	72.0112.0/A	VACUUM MOTOR SEALING SUPPORT [VER1]	1
6	72.0111.357	MOTOR UNIT COVER [MCH 1416-1001-2118], Kleur: Grey .357 P43	1
7	72.0051.0	MAGNET TOP UNIT 40X20X10MM [MCH 1416-1001-2044]	1
8	S.72.0031.2A	HINGE WELDING ASSY TOP UNIT [Ver2]	1
9	72.0033.1	COUNTER SUNK HEAD CAP SCREW M6X12 WITH NYLOK GLUE	4
10	72.0241.357	PLASTIC PLATE FOR HINGE WELDING ASSY, Kleur: Grey .357 (P431	1
11	72.0240.0	COUNT SUNK SCREW M3.5X13 PHILPS HEAD	2
12	72.0121.1	SCREW M4X12, CROSS HEAD, STANDARD THREAD, SST	4
13	72.0026.0	SCREW WN 5451 50X14 EJOT DELTA PT	6
14	89.0467.2099.02	SERIAL NO. VACUUM MOTOR	1

TOLERANCES UNSPECIFIED

LINE		ANGLE	
.xxx	±0.005	x	±2°
.xx	±0.05	.x	±1.5°
.x	±0.1	.xx	±1°
.	±0.2	.xxx	±0.5°
xx	±0.5		
xxx	±1		

REMARK: –

MATERIAL: –

SMT-FCT DONGGUAN
THE FRIENDLY FAMILY
东莞硕能塑胶模具有限公司
ASSEMBLY AND MOULDING OF CLEANING

APPROVED	CHECKED	DISGNED	REV.	A	PART NAME	IMOPXLU.FCT.7 EXPLODED VIEW	FIRST ANGLE PROJECTION
		CONNIE	UNIT	mm	PART NO	IMOPXLU.FCT.7	SIZE
SHEET OF	DATE	20/Dec/2019	SCALE		PROJECT		A4

Revision	Description	Revised	Date
A	FIRST RELEASE	CONNIE	20/Dec/2019

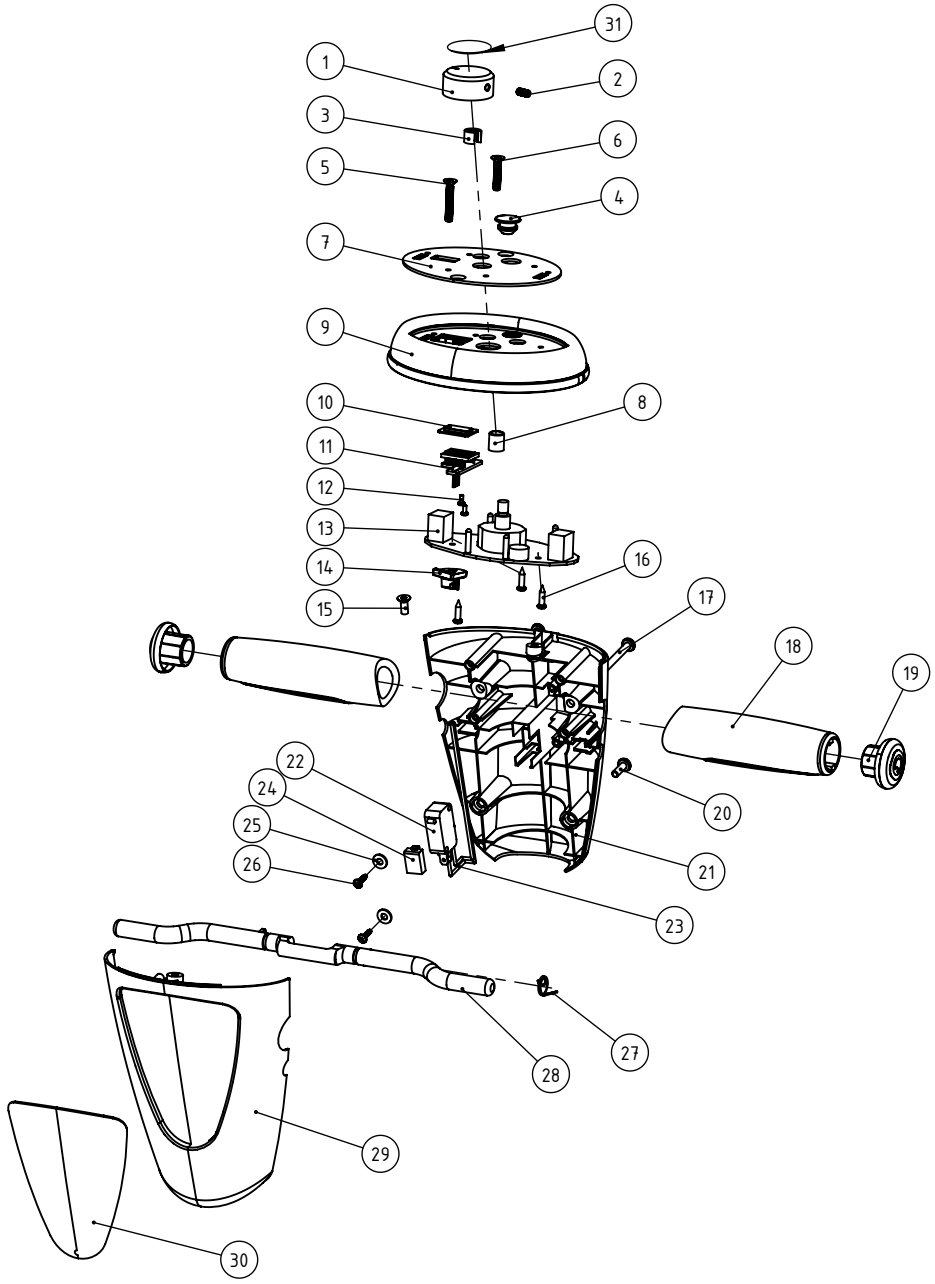

Item	P/N	Description	Qty.
	S.72.0064.2/797	ASSY CONTROL UNIT TIMER BLUE	
1	72.0155.5/797	TURNING BUTTON, NODIC OXIDATION M:AL, BLUE P312C	1
2	00.0115.0	HEXAGON SOCKET SET SCREW M4 X 8	1
3	72.0272.0	FIXATION INSERT TURNING BUTTON	1
4	72.0225.0/A	RUBBER BLOCK WATER SAVE ADJUSTMENT HOLE [A]	1
5	72.0273.0	M4X20 COUNTERSUNK SCREW STAINLESS STEEL	1
6	72.0273.1	M4X25 COUNTERSUNK SCREW STAINLESS STEEL	1
7	89.0467.2099.47	AL. STICKER IMOPXL + TIMER [PLATE]	1
8	72.0203.0	WATER SAVE BUTTON	1
9	72.0061.2E	TOP HOUSING CONTROL UNIT COLOR: WHITE + TIMER FRAME [E]	1
10	72.0415.996	TIMER TRANSPARENT COVER	1
11	72.0416.0	TIMER PCB	1
12	72.0328.0	SCREW M2X 5 CROSS HEAD SELF TAPPING	2
13	72.0417.0	TOP PCB IMOP + 30 DEGREE SWITCH	1
14	72.0419.0	I-MOP BALL SWITCH HOLDER	1
15	00.0002.7	SCREW 4 X 10	3
16	85.1008.1	SCREW M3 X12 CROSSHEAD SELFTAPPING BL-NI, SST	13
17	72.0122.1	SCREW M4X35CROSS HEAD, STANDARD THREAD, SST	2
18	72.0230.357	HANDLE GRIP WTHOUT PROTRUSION, Kleur: Grey.357 (P431C)	2
19	72.0229.797	END CAP GRIP WITH LOGO, Kleur: Blue .797 (P312C)	2
20	72.0121.1	SCREW M4X12, CROSS HEAD, STANDARD THREAD, SST	2
21	72.0059.2B	REAR HOUSING CONTROL UNIT Color: White [B]	1
22	72.0060.2	POWER SWITCH CONTROL UNIT OMORON	1
23	72.0120.0	ON/OFF SWITCH WIRES / L=250MM	1
24	72.0211.2	RUBBER BLOCK 15x10x5mm INJECTED	1
25	72.0271.0	PLASTIC WASHER 9x4x1mm	2
26	72.0057.0	SCREW WN 5451 25X10 EJOT DELTA PT [MCH 1416- 1001-2150]	2
27	72.0228.1	SPRING_SWITCH LEVER DIA.0.8MM (Ver.1)	1
28	72.0063.797	HANDLE CONTROL UNIT [MCH 1416-1001-2065], Kleur: Blue .797	1
29	72.0064.2B	FRONT HOUSING CONTROL UNIT Color: White [B]	1
30	S.89.0467.2099.00PS	ASSY AL.PLATE PLUS WITH CLIP + 3M TAPES [HANDLE] XL	1
31	89.0469.2099.24	REMOVE STICKER ON THE SWITCH	1

TOLERANCES UNSPECIFIED			
LINE		ANGLE	
.xxx	±0.005	x	±2°
.xx	±0.05	.x	±1.5°
.x	±0.1	.xx	±1°
.	±0.2	.xxx	±0.5°
xx	±0.5		
xxx	±1		

REMARK: –

MATERIAL: –

SMT-FCT DONGGUAN
THE FRIENDLY FAMILY
东莞硕能塑胶模具有限公司
ASSEMBLY AND MOULDING OF CLEANING

APPROVED	CHECKED	DISGNED	REV.	A	PART NAME	IMOPXLU.FCT.7 EXPLODED VIEW	FIRST ANGLE PROJECTION
		CONNIE	UNIT	mm	PART NO	IMOPXLU.FCT.7	SIZE
SHEET 1 OF 1	DATE	20/Dec/2019	SCALE		PROJECT		A4

Revision	Description	Revised	Date
A	FIRST RELEASE	CONNIE	20/Dec/2019

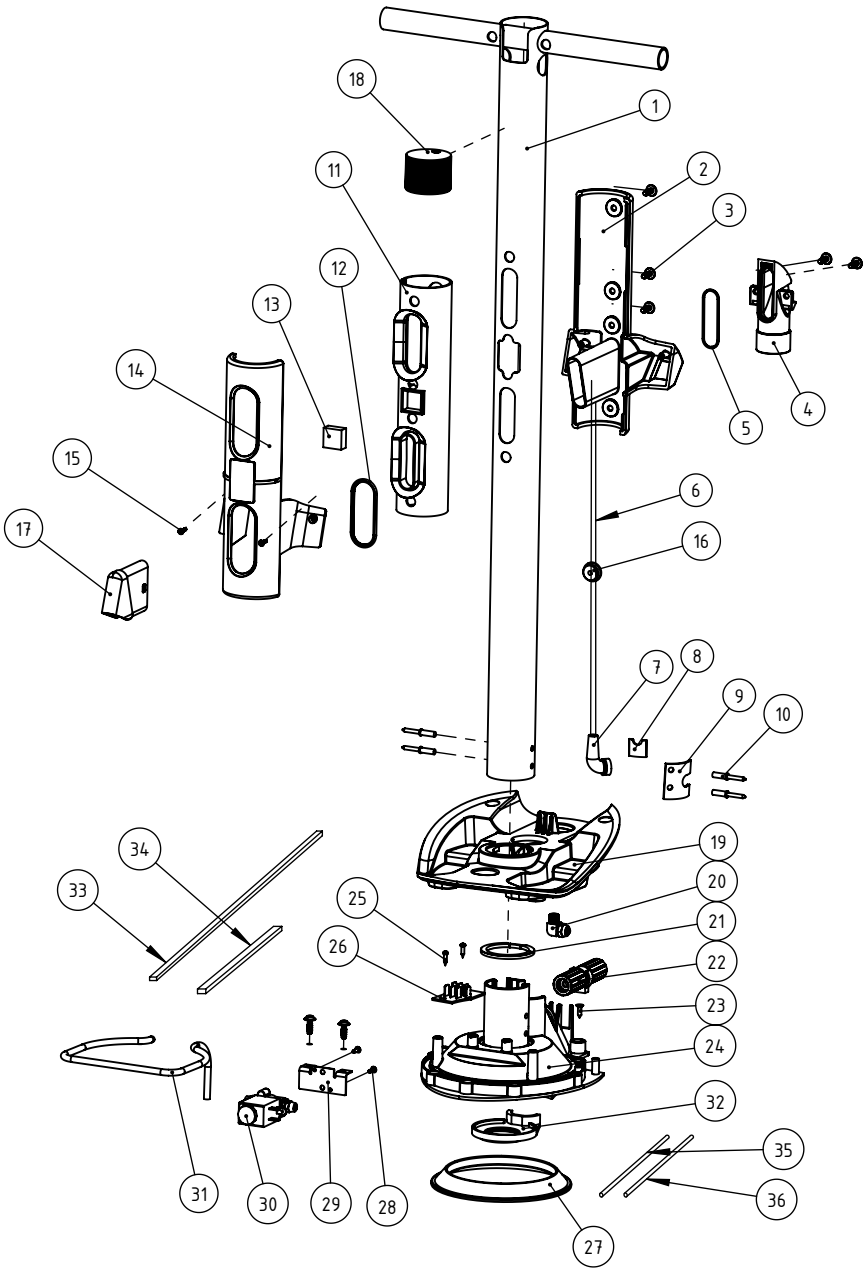

Item	P/N	Description	Qty.
	S.72.0040.0	ASSY INLET TUBE [MCH 1416-1001-1024]	
1	S.72.0041.0A	ASSY INLET TUBE WELDING - 1 PIECE	1
2	72.0055.357	TANK HOLDER REAR [MCH 1416-1001-2197], Kleur: Grey .357	1
3	72.0026.0	SCREW WN 5451 50X14 EJOT DELTA PT	6
4	72.0056.357	STRETCH HOSE CONNECTOR [MCH 1416-1001-2199], Kleur: Grey .35	1
5	72.0296.0	GASKET FOR HOSE CONNECTOR	1
6	S.72.0039.0/D	ASSY UTP CABLE (PVC+FIBRE) RJ45	1
7	72.0042.0	POWER CABLE GUIDING RUBBER [MCH 1416-1001-2187]	1
8	72.0268.0	SEALING RUBBER SHEET AL TUBE	1
9	72.0267.0	SEALING PRESSUR PLATE	1
10	72.0119.0	RIVET WITH DIA. 5MM & LENGTH 10 MM	4
11	72.0052.0	DIRT COMPARTMENT SEAL [MCH 1416-1001-2081]	1
12	72.0160.0	O RING WIRE DIA.3MM, OD46MM	1
13	72.0053.0	MAGNET TOP UNIT SMALL 20X20X10MM [MCH 1416-1001-2172]	1
14	72.0054.357	TANK HOLDER FRONT [MCH 1416-1001-2196], Kleur: Grey .357	1
15	72.0057.0	SCREW WN 5451 25X10 EJOT DELTA PT [MCH 1416-1001-2150]	2
16	72.0246.0	SEALING RING SIGAR UTP CONNECTOR	1
17	72.0163.1/996	TRANPARENT PLASTIC DEFLECTOR DIRTY TANK	1
18	72.0038.0A	END CAP INLET TUBE [MCH 1416-1001-2152]	1
19	S.72.0113.357B	ASSY MOTOR UNIT TOP	1
20	72.0049.1	ANGLE METAL CONNECTOR	1
21	72.0044.0	MOTOR UNIT FRAME RUBBER [MCH 1416-1001-2189]	1
22	S.72.0243.0	ASSEMBLY SIGAR UTP CONNECTOR	1
23	72.0240.0	COUNT SUNK SCREW M3.5X13 PHILPS HEAD	1
24	72.0114.357	MOTOR UNIT FRAME [MCH 1416-1001-2122], Kleur: Grey .357	1
25	85.1008.1	SCREW M3 X12 CROSSHEAD SELFTAPPING BL-NI,SST	1
26	72.0182.0/A	PCB MAGNETIC VALVE & VAC MOTOR CONNECTION [A]	1
27	72.0045.0/A	VACUUM MOTOR SEALING TOP SHARE HARDNESS 45	1
28	72.0206.1	SCREW WN 5451 50X14 EJOT DELTA PT	2
29	72.0050.1A	MAGNETIC VENTIL FIXATION PLATE STAINLESS STEEL	1
30	S.72.0026.6	ASSY MAGETIC VALVE PARKER	1
31	72.0022.2	WATER CHANNEL DIA.6MM L:225mm	1
32	72.0352.0	CENTER SEALING GASKET TOP VACUUM MOTOR	1
33	72.0209.0B	SEALING GASKET EVA 3X1.5X593MM	1
34	72.0210.0B	SEALING GASKET EVA 4X2.5X150MM	1
35	72.0127.0	187 TERMINAL + WIRE 14AWG, RED, L=280mm, 250 TERMINAL	1
36	72.0128.0	187 TERMINAL + WIRE 14AWG, BLACK, L=280mm, 250 TERMINAL	1
37	00.0117.0 NO SHOW	GULE ND401	1
38	72.0232.0 NO SHOW	THREAD SEALING ADHESIVE	0.02

TOLERANCES UNSPECIFIED			
LINE		ANGLE	
.xxx	±0.005	x	±2°
.xx	±0.05	.x	±1.5°
.x	±0.1	.xx	±1°
.	±0.2	.xxx	±0.5°
xx	±0.5		
xxx	±1		

REMARK: –

MATERIAL: –

SMT-FCT DONGGUAN
THE FRIENDLY FAMILY
东莞硕能塑胶模具有限公司
ASSEMBLY AND MOULDING OF CLEANING

APPROVED	CHECKED	DISGNED	REV.	A	PART NAME	IMOPXLU.FCT.7 EXPLODED VIEW	FIRST ANGLE PROJECTION
		CONNIE	UNIT	mm	PART NO	IMOPXLU.FCT.7	SIZE
SHEET OF	DATE	20/Dec/2019	SCALE		PROJECT		A4

Revision	Description	Revised	Date
A	FIRST RELEASE	CONNIE	20/Dec/2019

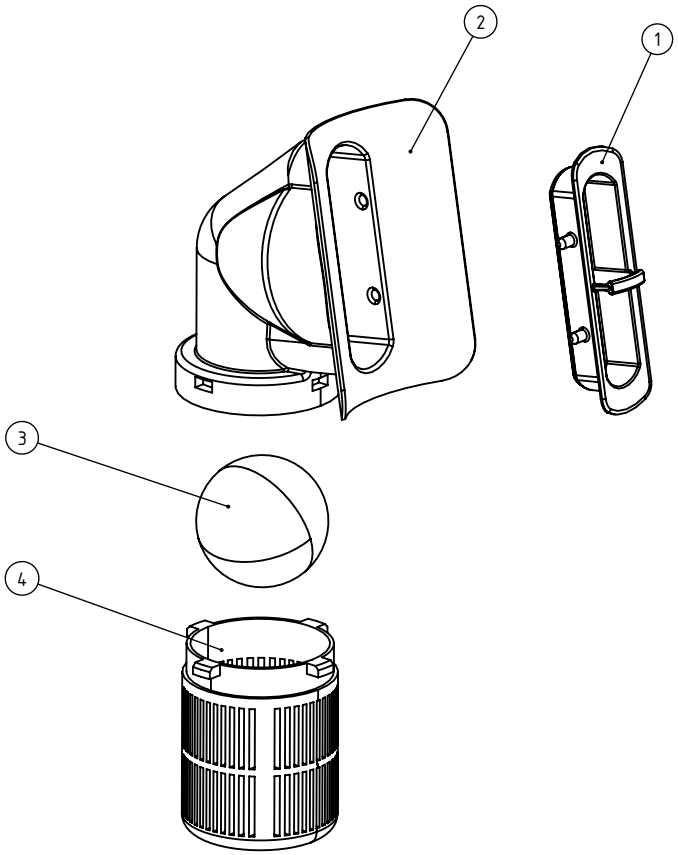

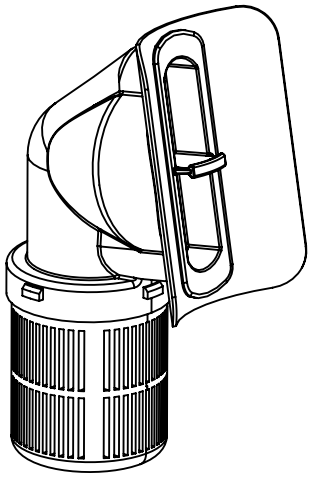

Item	P/N	Description	Qty.
	S.72.0407.8	ASSY FLOAT BALL	
1	72.0406.8	HOUSING SUPPORT YELLOW P122C	1
2	72.0408.0A	FLOAT BALL HOUSING	1
3	72.0407.0A	FLOAT BALL 35MM	1
4	72.0405.8A	FLOAT BALL CAGE YELLOW P122C	

TOLERANCES UNSPECIFIED			
LINE		ANGLE	
.xxx	±0.005	x	±2°
.xx	±0.05	.x	±1.5°
.x	±0.1	.xx	±1°
.	±0.2	.xxx	±0.5°
xx	±0.5		
xxx	±1		

REMARK: –

MATERIAL: –

SMT-FCT DONGGUAN
THE FRIENDLY FAMILY
东莞硕能塑胶模具有限公司
ASSEMBLY AND MOULDING OF CLEANING

APPROVED	CHECKED	DISGNED	REV.	A	PART NAME	IMOPXLU.FCT.7 EXPLODED VIEW	FIRST ANGLE PROJECTION
		CONNIE	UNIT	mm	PART NO	IMOPXLU.FCT.7	SIZE
SHEET OF	DATE	20/Dec/2019	SCALE		PROJECT		A4

Revision	Description	Revised	Date
A	FIRST RELEASE	CONNIE	20/Dec/2019

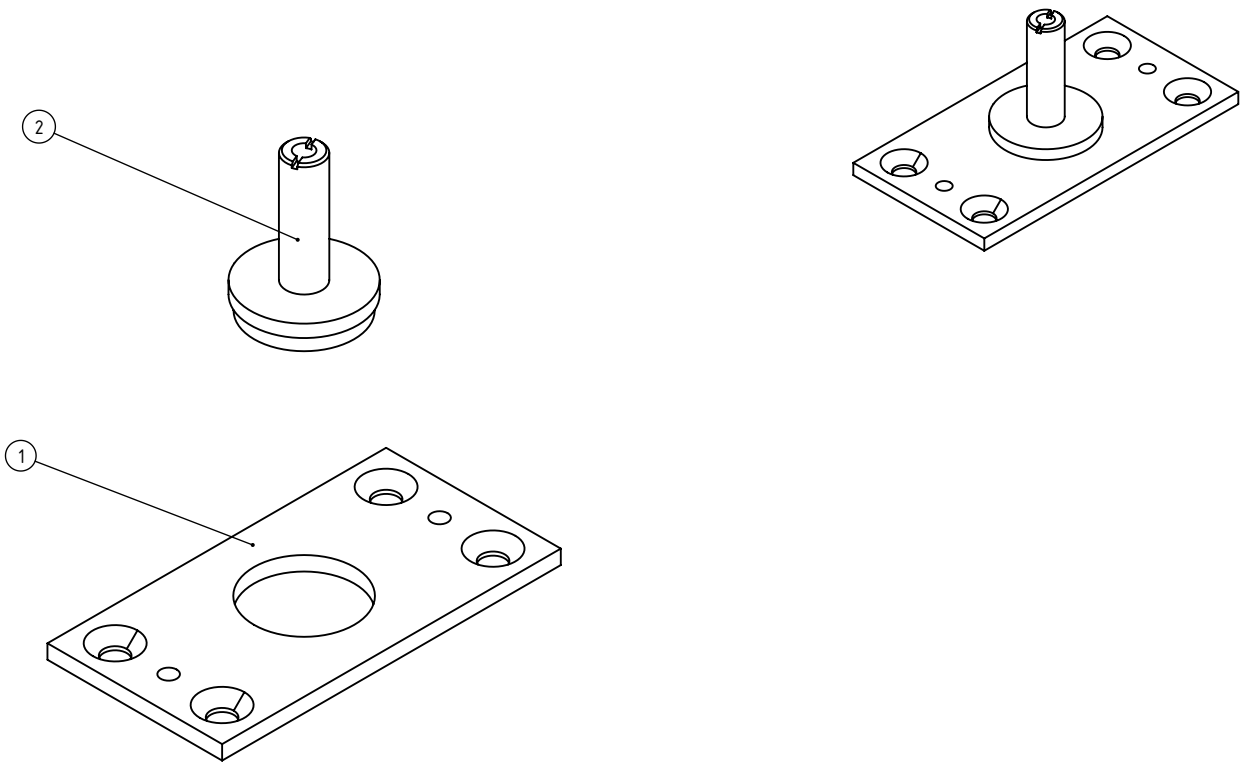

Item	P/N	Description	Qty.
	S.72.0031.2A	HING WEKDUBG ASSY TOP UNIT	
1	72.0031.1	HINGE CONSTRUCTION PLATE TOP UNIT	1
2	72.0032.0	HINGE AXIS TOP UNIT [MCH 1416-1001-2027]	1

TOLERANCES UNSPECIFIED			
LINE		ANGLE	
.xxx	±0.005	x	±2°
.xx	±0.05	.x	±1.5°
.x	±0.1	.xx	±1°
.	±0.2	.xxx	±0.5°
xx	±0.5		
xxx	±1		

REMARK: –

MATERIAL: –

SMT-FCT DONGGUAN
THE FRIENDLY FAMILY
东莞硕能塑胶模具有限公司
ASSEMBLY AND MOULDING OF CLEANING

APPROVED	CHECKED	DISGNED	REV.	A	PART NAME	IMOPXLU.FCT.7 EXPLODED VIEW	FIRST ANGLE PROJECTION
		CONNIE	UNIT	mm	PART NO	IMOPXLU.FCT.7	SIZE
SHEET 1 OF 1	DATE	20/Dec/2019	SCALE		PROJECT		A4

Revision	Description	Revised	Date
A	FIRST RELEASE	CONNIE	20/Dec/2019

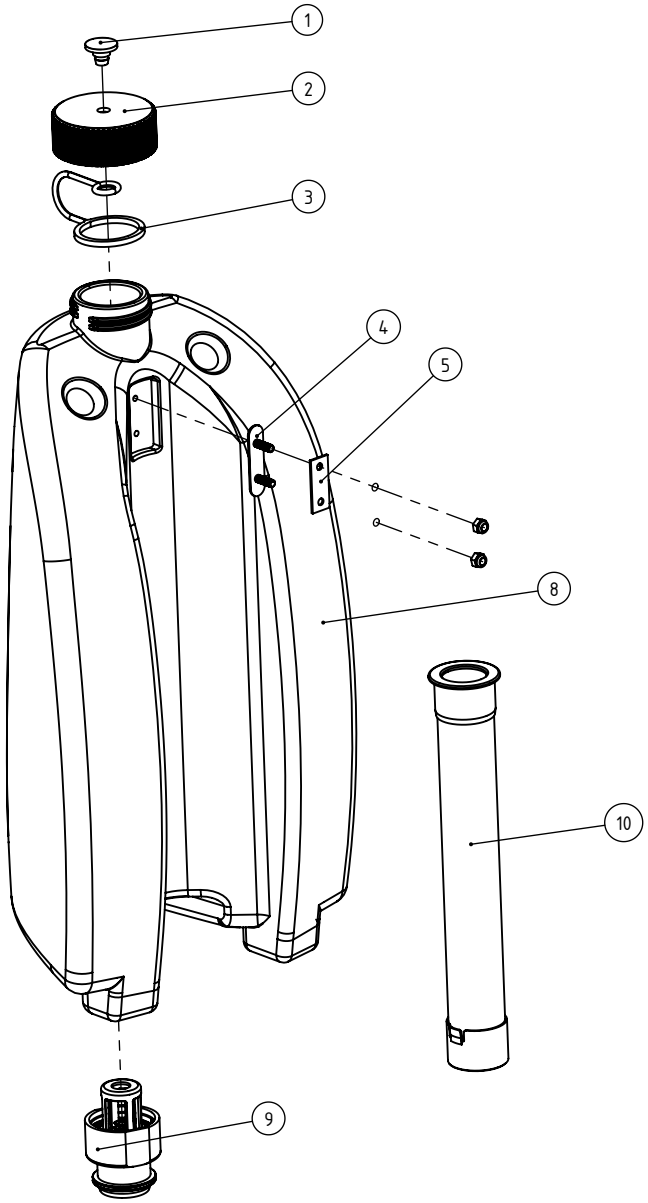

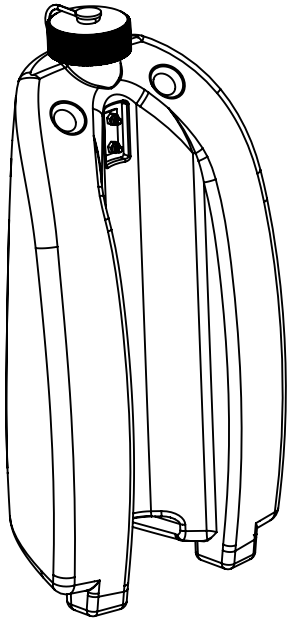

Item	P/N	Description	Qty.
	S.72.0081.1B	ASSY CLEAN COMPARMENT COMPLETE WITH FILLING HOSE	
1	72.0254.1	SLEEVE CAP HOLDER CLEAN TANK	1
2	72.0251.797	CAP WITH HOLE, BLEUR: BLUE .797 (P312C)	1
3	72.0252.0	CAP HOLDER	1
4	72.0253.0	HOLDER PLATE CLIP CLEAN TANK	1
5	72.0290.0	RUBBER CUSHION FOR METAL CLIP	1
6	72.0288.0	METAL CLIP CLEAN TANK	1
7	72.0261.0	NUT M4 NYLON STAINLESS	2
8	72.0081.1	CLEAN COMPARTMENT, CAP VERSION	1
9	S.72.0085.0	WATER COUPLING VERSION 2	1
10	S.72.0250.0	ASS FILLING HOSE FOR IMOP 30CM	1

TOLERANCES UNSPECIFIED

LINE		ANGLE	
.xxx	±0.005	x	±2°
.xx	±0.05	.x	±1.5°
.x	±0.1	.xx	±1°
.	±0.2	.xxx	±0.5°
xx	±0.5		
xxx	±1		

REMARK: –

MATERIAL: –

SMT-FCT DONGGUAN
THE FRIENDLY FAMILY
东莞硕能塑胶模具有限公司
ASSEMBLY AND MOULDING OF CLEANING

APPROVED	CHECKED	DISGNED	REV.	A	PART NAME	IMOPXLU.FCT.7 EXPLODED VIEW	FIRST ANGLE PROJECTION
		CONNIE	UNIT	mm	PART NO	IMOPXLU.FCT.7	SIZE
SHEET OF	DATE	20/Dec/2019	SCALE		PROJECT		A4

Revision	Description	Revised	Date
A	FIRST RELEASE	CONNIE	20/Dec/2019

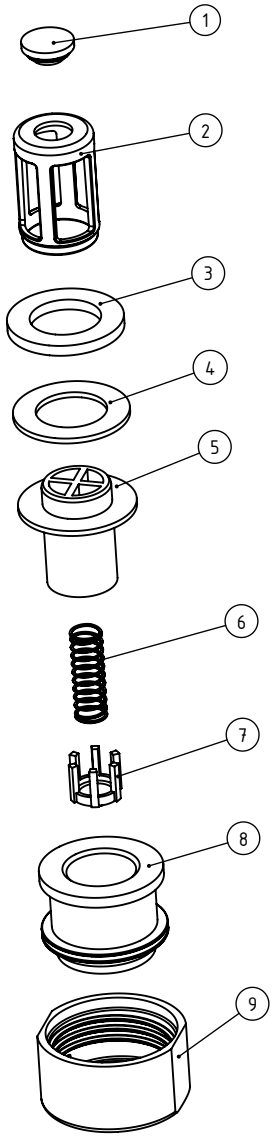

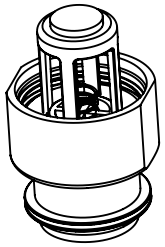

Item	P/N	Description	Qty.
	S.72.0085.357	WATER COUPLING VERSION	
1	72.0192.6	RUBBER BLOCK FILTER	1
2	72.0085.0	WATER COUPLING FILTER	1
3	72.0192.5	RUBBER GASKET ID 19mm, OD31mm, T=1.5mm	1
4	72.0192.5/A	RUBBER GASKET ID 19mm, OD31mm, T=3mm	1
5	72.0192.2/375A	HOUSING OF VALVE	1
6	72.0192.3/A	SPRINGWATER COUPING (A)	1
7	72.0192.4/357A	VALVE WATER COUPING, GREY (A)	1
8	72.0192.1	HOUSING WATER COUPING	1
9	72.0289.0/8	METAL CAP WATER COUPING, YELLOW	1

TOLERANCES UNSPECIFIED

LINE		ANGLE	
.xxx	±0.005	x	±2°
.xx	±0.05	.x	±1.5°
.x	±0.1	.xx	±1°
.	±0.2	.xxx	±0.5°
xx	±0.5		
xxx	±1		

REMARK: –

MATERIAL: –

SMT-FCT DONGGUAN
THE FRIENDLY FAMILY
东莞硕能塑胶模具有限公司
ASSEMBLY AND MOULDING OF CLEANING

APPROVED	CHECKED	DISGNED	REV.	A	PART NAME	IMOPXLU.FCT.7 EXPLODED VIEW	FIRST ANGLE PROJECTION
		CONNIE	UNIT	mm	PART NO	IMOPXLU.FCT.7	SIZE
SHEET OF	DATE	20/Dec/2019	SCALE		PROJECT		A4

Revision	Description	Revised	Date
A	FIRST RELEASE	CONNIE	20/Dec/2019

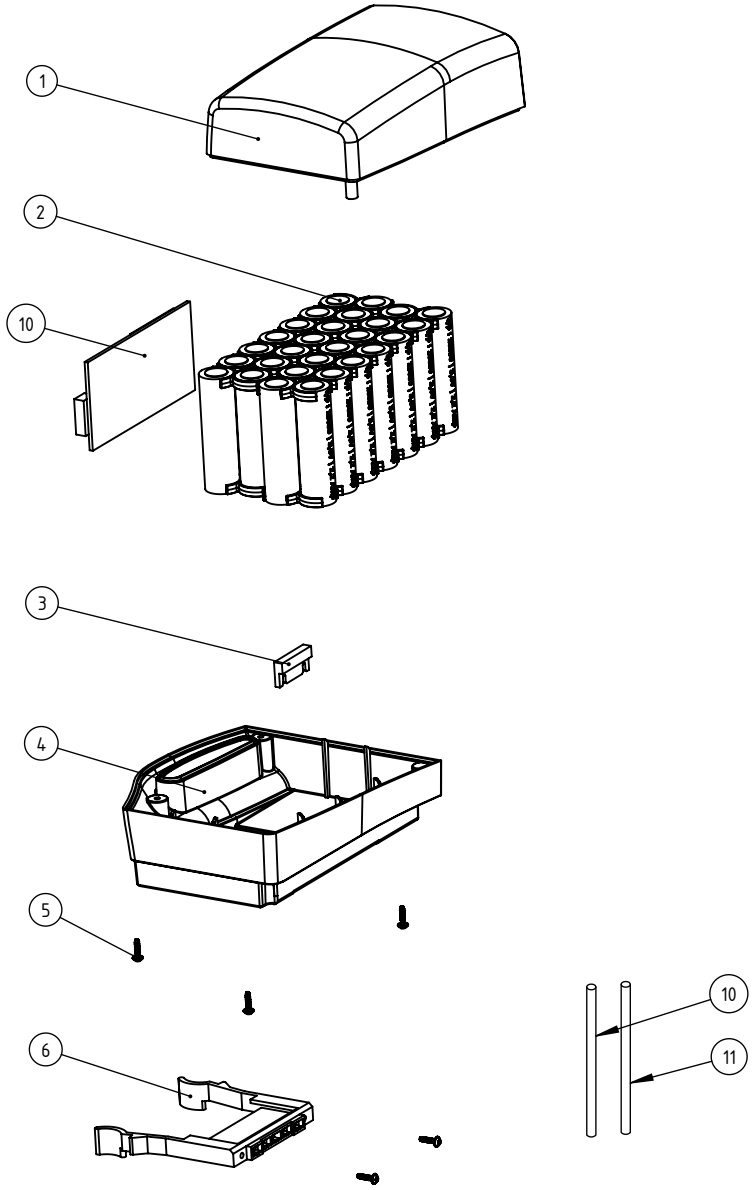

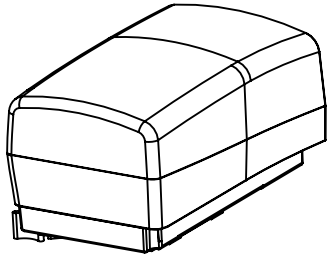

Item	P/N	Description	Qty.
	S.72.0074.357BSRA	ASSY BATTERY PACK BLUE LEFT BMS (FIRE RES) (W/O FUSE)	
1	72.0078.357R	BATTERY PACK HOUSING TOP LEFT GREY [FIRE RESISTANT]	1
2	72.0131.1/C	BATTERY PACK CELLS WITH BMS [14Ah][W/O FUSE]	1
3	72.0074.357R	BATTERY PACK HOUSING BOTTOM LEFT GREY [FIRE RESTANT]	1
4	72.0057.0	SCREW WN 5451 25X10 EJOT DELATA PT (MCH 1416-1001-2150)	6
5	72.0075.797	BATTERY CONNECTOR FEMALE, BLUE, LEFT (P312C)	1
6	72.0218.0	LIMITATION BLOCK FEMALE CONNECTOR	1
7	72.0170.0 NO SHOW	BUBBLE WRAP BAG 250x210	1
8	89.0469.2099.05 NO SHOW	SERIAL NO. BATTERY (C)	1
9	89.0469.2099.06BM NO SHOW	STICKER SAFETY ADVISE FOR BATTERY LEFT BMS	1
10	72.0284.0	BMS BOARD IMOP BATTERY	1
11	72.0129.0	BATTERY CONNECTOR + WIRES 14AWG, RED, L=250mm	1
12	72.1030.0	BATTERY CONNECTOR + WIRES 14AWG, BLACK, L=250mm	1

TOLERANCES UNSPECIFIED			
LINE		ANGLE	
.xxx	±0.005	x	±2°
.xx	±0.05	.x	±1.5°
.x	±0.1	.xx	±1°
.	±0.2	.xxx	±0.5°
xx	±0.5		
xxx	±1		

REMARK: –

MATERIAL: –

SMT-FCT DONGGUAN
THE FRIENDLY FAMILY
东莞硕能塑胶模具有限公司
ASSEMBLY AND MOULDING OF CLEANING

APPROVED	CHECKED	DISGNED	REV.	A	PART NAME	IMOPXLU.FCT.7 EXPLODED VIEW	FIRST ANGLE PROJECTION
		CONNIE	UNIT	mm	PART NO	IMOPXLU.FCT.7	SIZE
SHEET OF	DATE	20/Dec/2019	SCALE	1:1	PROJECT		A4

Revision	Description	Revised	Date
A	FIRST RELEASE	CONNIE	20/Dec/2019

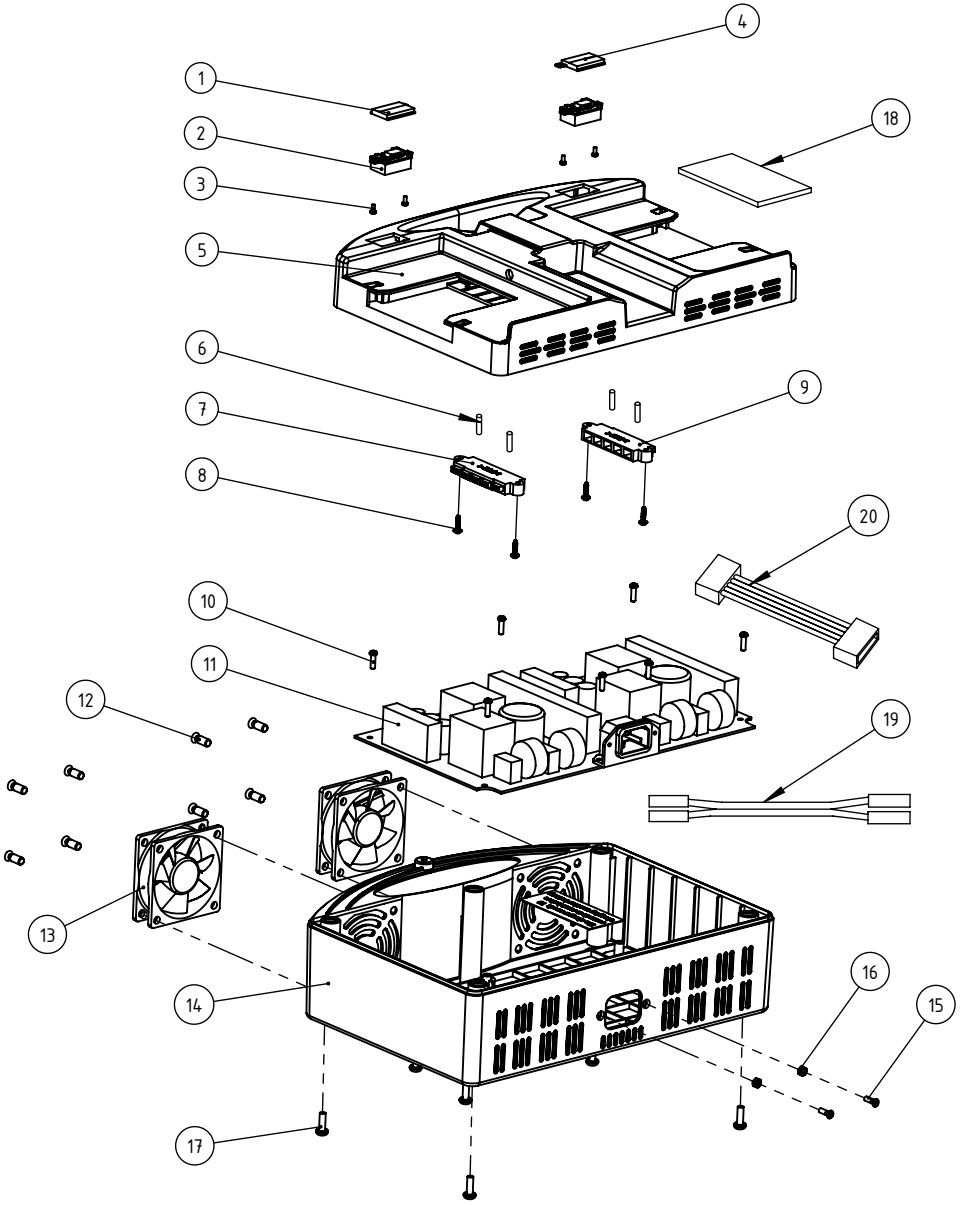

Item	P/N	Description	Qty.
	S.72.0344.3	IMOP BATTERY MCU CHARGER 3 PIN [9A] PSE+CB	
1	72.0275.0	TRANSPARENT COVER VOLTAGE DISPLAY LEFT	1
2	72.0174.0/B	VOTAGE DISPLAY WITH BAR	2
3	72.0328.0	SCREW M2X 5 CROSS HEAD SELF TAPPING	4
4	72.0275.1	TRANSPARENT COVER VOLTAGE DISPLAY RIGHT	1
5	72.0187.2R	NEW CHARGER TOP HOUSING WHITE [FIRE RESISTANT]	1
6	85.0050.1	ALIGNMENT PIN LONGER VERSION	4
7	72.0068.357	BATTERY CONNECTOR MALE Left:Blue, Right:Grey	1
8	72.0057.0	SCREW WN 5451 25X10 EJOT DELTA PT [MCH 1416-1001-2150]	4
9	72.0068.797	BATTERY CONNECTOR MALE, Right: BLUE	1
10	72.0353.0	SCREW M3x10 CROSSHEAD SELFTAPED	7
11	72.0106.0-9A	PCB CHARGE UNIT 9A	1
12	72.0357.0	COUNTER SUNK SCREW M5x10	8
13	72.0351.0	FANS	2
14	72.0188.357-9A	CHARGER BOTTOM HOUSING GREY 9A	1
15	66.0301.0	COUNTER SUNK SCREW M3	2
16	20.0031.5	NUT M3 NYLON	2
17	00.0121.0	SCREW ST4 X 9.3 CROSSHEAD SELFTAPED BL-NI	6
18	89.0469.2089.02	CHARGER PROGRAM STICKER [70X30MM]	1
19	72.0350.0	TWO MALE TERMINALS WITH RED & BLACK LINES	1
20	72.0350.1	LINES + PIN	2

TOLERANCES UNSPECIFIED

LINE		ANGLE	
.xxx	±0.005	x	±2°
.xx	±0.05	.x	±1.5°
.x	±0.1	.xx	±1°
.	±0.2	.xxx	±0.5°
xx	±0.5		
xxx	±1		

REMARK: –

MATERIAL: –

SMT-FCT DONGGUAN
THE FRIENDLY FAMILY
东莞硕能塑胶模具有限公司
ASSEMBLY AND MOULDING OF CLEANING

APPROVED	CHECKED	DISGNED	REV.	A	PART NAME	IMOPXLU.FCT.7 EXPLODED VIEW	FIRST ANGLE PROJECTION
		CONNIE	UNIT	mm	PART NO	IMOPXLU.FCT.7	SIZE
SHEET 1 OF 1	DATE	20/Dec/2019	SCALE		PROJECT		A4

Revision	Description	Revised	Date
A	FIRST RELEASE	CONNIE	20/Dec/2019

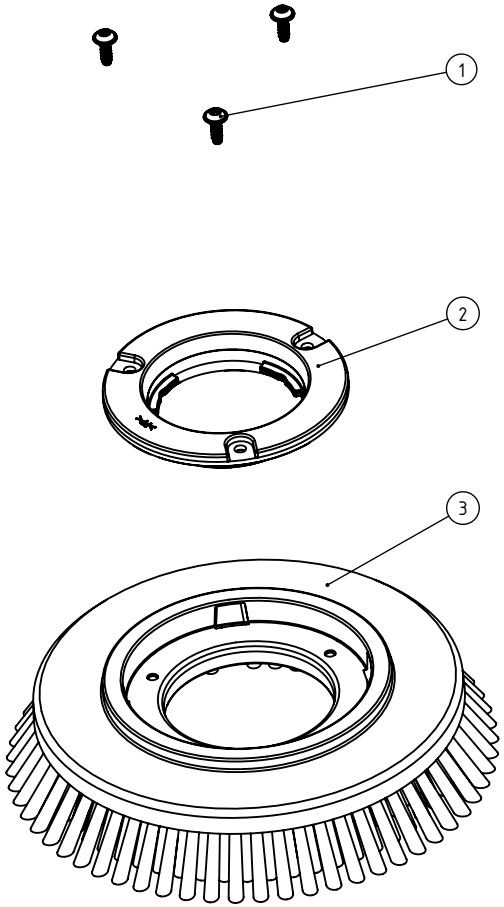

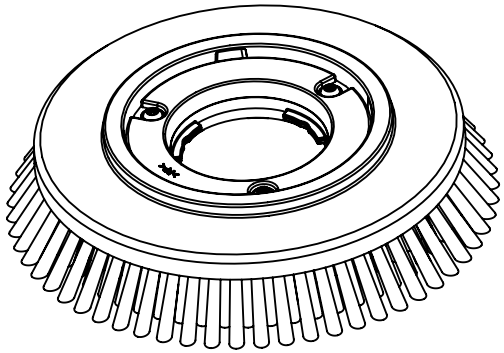

Item	P/N	Description	Qty.
	S.72.0092.797/797	ASS BRUSH IMOP COMPLETE BLUE BRISTLE, BLUE LOCKER	
1	72.0026.0	SCREW WN 5451 50X14 EJOT DELTA PT (MCH 1416-1001-2004)	3
2	72.0093.797	BRUSH LOCKER BLUE (P312C)	1
3	S.72.0091.797	ASSY BRUSH DISC BLUE (P312C)	1

TOLERANCES UNSPECIFIED			
LINE		ANGLE	
.xxx	±0.005	x	±2°
.xx	±0.05	.x	±1.5°
.x	±0.1	.xx	±1°
.	±0.2	.xxx	±0.5°
xx	±0.5		
xxx	±1		

REMARK: –

MATERIAL: –

SMT-FCT DONGGUAN
THE FRIENDLY FAMILY
东莞硕能塑胶模具有限公司
ASSEMBLY AND MOULDING OF CLEANING

APPROVED	CHECKED	DISGNED	REV.	A	PART NAME	IMOPXLU.FCT.7 EXPLODED VIEW	FIRST ANGLE PROJECTION
		CONNIE	UNIT	mm	PART NO	IMOPXLU.FCT.7	SIZE
SHEET OF	DATE	20/Dec/2019	SCALE		PROJECT		A4

Revision	Description	Revised	Date
A	FIRST RELEASE	CONNIE	20/Dec/2019

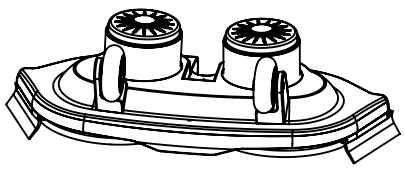

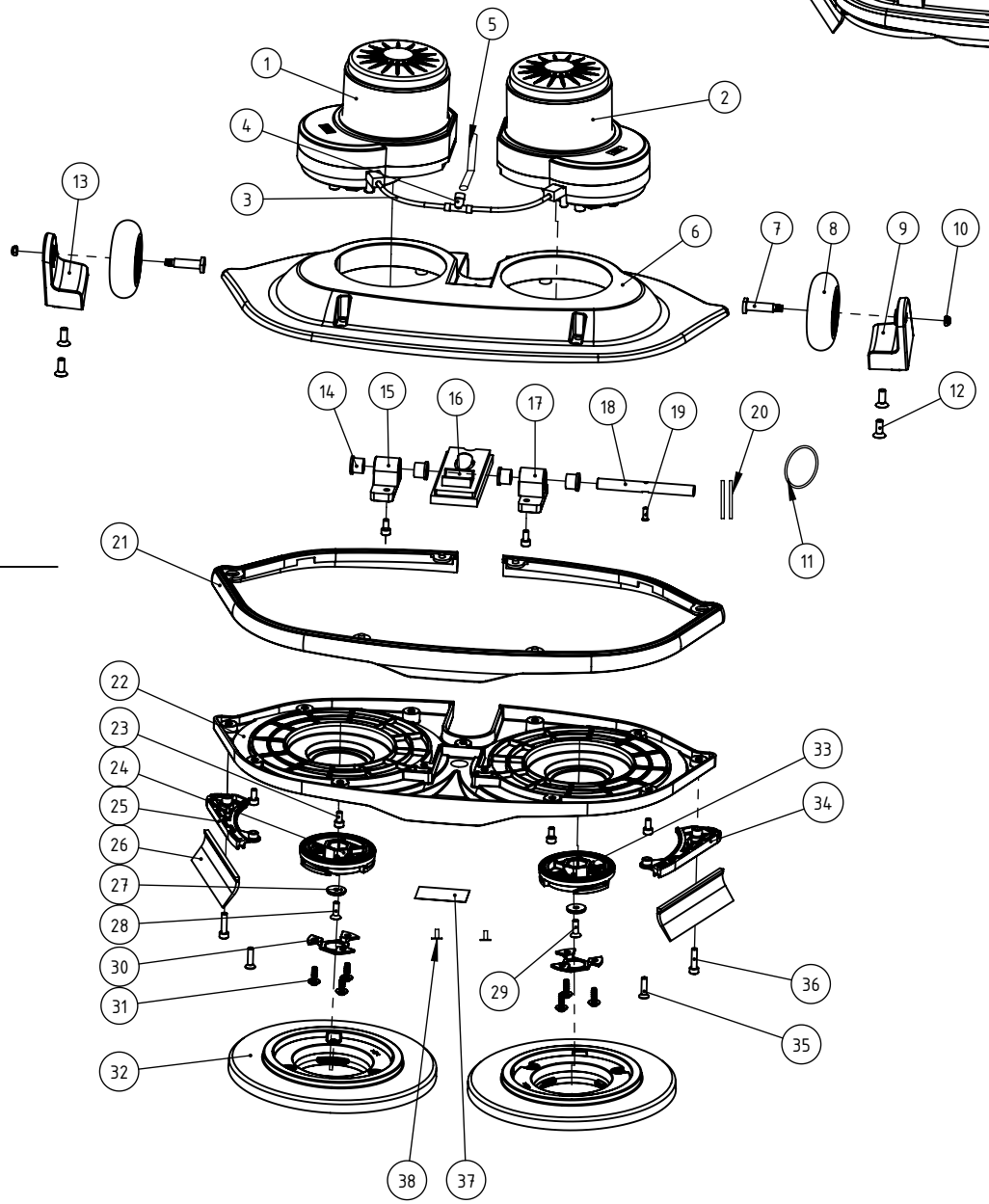

Item	P/N	Description	Qty.
	BU.IMOP.230.36/00	ASSY BRUSH UNIT IMOP 24V SILVER CATAFORESE BLACK	
1	S.72.0000.1R	ASSY BRUSH MOTOR RIGHT	1
2	S.72.0000.0R	ASSY BRUSH MOTOR LEFT	1
3	72.0022.1	WATER CHANNEL DIA.4MM L:110mm [MCH 1416-1001-2109]	2
4	72.0109.0	WATER COUPLING BRUSH MOTOR	1
5	72.0022.0	WATER CHANNEL DIA.6MM L:570mm [MCH 1416-1001-2034]	1
6	72.0008.00	BRUSH MOTOR CONSTRUCTION COVER CATEFORESE TREATMENT	1
7	72.0027.3	SHAFT TRANSPORT CASTOR [V2]	2
8	72.0029.2/797	WHITE CASTOR + BLUE BRACKET	2
9	72.0009.00	TRANSPORT WHEEL PILLAR LEFT CATEFORESE TREATMENT	1
10	04.0048.0	NUT M5 NYLON	2
11	89.0469.2099.24	REMOVE STICKER ON THE SWITCH	2
12	72.0002.0N	NYLOK SCREW COUNTER SUNK BOLT M6X16 [MCH 1416-1001-2104]	4
13	72.0009.10	TRANSPORT WHEEL PILLAR RIGHT CATEFORESE TREATMENT	1
14	72.0016.0	BRUSHING AXIS 10 [MCH 1416-1001-2112]	4
15	72.0015.1	BRUSH UNIT HINGE SUPPORT RIGHT [MCH 1416-1001-2186]	1
16	72.0021.0	CONSTRUCTION COVER SEAL [MCH 1416-1001-2115]	1
17	72.0015.0	BRUSH UNIT HINGE SUPPORT LEFT [MCH 1416-1001-2185]	1
18	72.0013.0	CHASSIS HINGE [MCH 1416-1001-2012]	1
19	72.0014.0N	NYLOK SCREW COUNTER SUNK BOLT M4x12	1
20	72.0394.0	IMOP PEDESTAL SHAFT PIN	2
21	72.0023.0	BRUSH UNIT PROTECTOR [MCH 1416-1001-2102]	1
22	72.0110.357A	BRUSH UNIT BOTTOM PART	1
23	72.0017.0N	NYLOK SOCKET HEAD CAP SCREW M5X10	17
24	72.0024.1/357	DRIVING WHEEL BOTTOM RIGHT Color: Grey [P431C]	1
25	72.0402.3	SPLASHING GUARD BOTOM RIGHT	1
26	72.0402.1	TRANSPARENT SPLASHING GUARD RIGHT	2
27	72.0025.1	SUPPORT DISC DRIVING WHEEL SIDE ,HOLE DIA.5MM	2
28	72.0014.3N/1	NYLOK SCREW COUNTER SUNK BOLT M5X18.5	1
29	72.0014.4N/1	NYLOK SCREW COUNTER SUNK BOLT M5X18.5[REVERSE THREAD BLACK]	1
30	72.0312.797	COVER BRUSH MOTOR SCREW, Kleur: Blue .797 (P312C)	2
31	72.0026.0	SCREW WN 5451 50X14 EJOT DELTA PT	6
32	S.72.0092.797/797	ASS BRUSH IMOP COMPLETE BLUE BRISTLE, BLUE LOCKER	2
33	72.0024.0/357	DRIVING WHEEL BOTTOM LEFT Color: Grey [P431C]	1
34	72.0401.3	SPLASHING GUARD BOTOM LEFT	1
35	72.0014.3N/1	TRANSPARENT SPLASHING GUARD LEFT	2
36	72.0260.0	NYLOK HEXAGON SOCKET HEAD CAP SCREWS M5X20 SST	2
37	89.0467.2099.04B	METAL PLATE IMOP THICKNESS:0.5MM	1
38	109.0083.0	SCREW ST3 X 5 Y SLOT FT SU304	2
39	57.0076.0 NO SHOW	BLACK CABLE TIE 3 X 15 BLACK	1

TOLERANCES UNSPECIFIED			
LINE		ANGLE	
.xxx	±0.005	x	±2°
.xx	±0.05	.x	±1.5°
.x	±0.1	.xx	±1°
.	±0.2	.xxx	±0.5°
xx	±0.5		
xxx	±1		

REMARK: –

MATERIAL: –

SMT-FCT DONGGUAN
THE FRIENDLY FAMILY
东莞硕能塑胶模具有限公司

ASSEMBLY AND MOULDING OF CLEANING

APPROVED	CHECKED	DISGNED	REV.	A	PART NAME	IMOPXLU.FCT.7 EXPLODED VIEW	FIRST ANGLE PROJECTION
		CONNIE	UNIT	mm	PART NO	IMOPXLU.FCT.7	SIZE
SHEET 1 OF 1	DATE	20/Dec/2019	SCALE		PROJECT		A4

Revision	Description	Revised	Date
A	FIRST RELEASE	CONNIE	20/Dec/2019

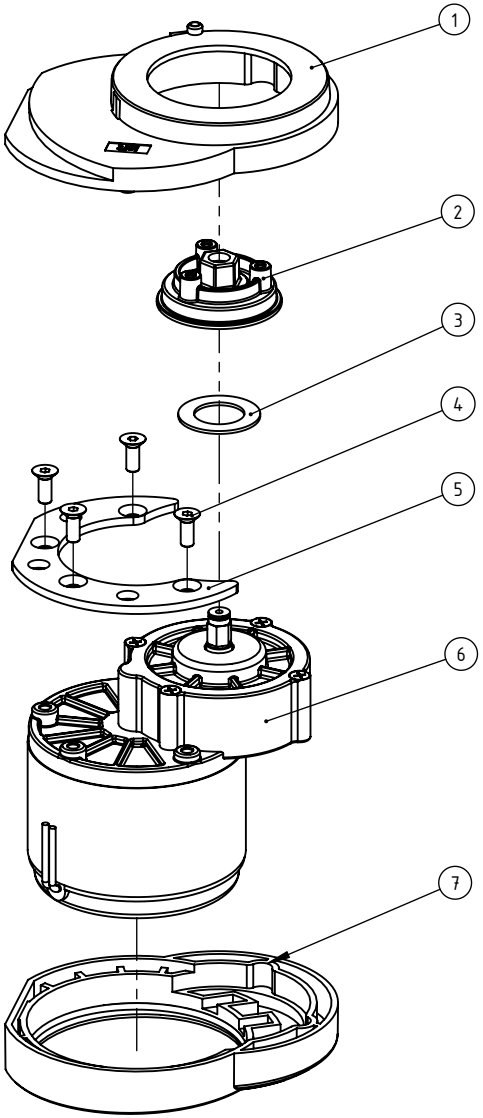

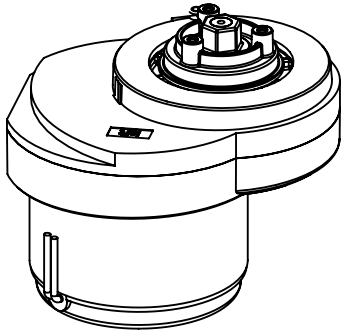

Item	P/N	Description	Qty.
	S.72.0000.0R	ASSY BRUSH MOTOR LEFT (Ve1)	
1	72.0007.0	BRUSH MOTOR SUPPORT SUPPORT RUBBER LEFT (MCH 1416-1001-2107)	1
2	72.0005.357/C	DRIVING WHEEL TOP WITH METAL INSERT (VER.1)	1
3	72.0004.0	FELT BRUSH MOTOR (MCH 1416-1001-2183)	1
4	72.0002.0N	NYLOK SCREW COUNTER SUNK BOLT M6X16 (MCH 1416-1001-2104)	4
5	72.0001.0	BRUSH MOTOR CONSTRUCTION RING LEFT (MCH 1416-1001-2106)	1
6	72.0000.0MR	BRUSH MOTOR HELICAL GEARS LEFT (MCH 1416-1001-2105)	1
7	72.0006.0/A	BRUSH MOTOR FIXATION CONDUCTIVE RUBBER LEFT	1
8	72.0108.0 NO SHOW	LOCKTITE 222	0.02
9	89.0469.2099.00 NO SHOW	SERTAL NO. BRUSH MOTOR LEFT	1

TOLERANCES UNSPECIFIED			
LINE		ANGLE	
.xxx	±0.005	x	±2°
.xx	±0.05	.x	±1.5°
.x	±0.1	.xx	±1°
.	±0.2	.xxx	±0.5°
xx	±0.5		
xxx	±1		

REMARK: –

MATERIAL: –

SMT-FCT DONGGUAN
THE FRIENDLY FAMILY
东莞硕能塑胶模具有限公司
ASSEMBLY AND MOULDING OF CLEANING

APPROVED	CHECKED	DISGNED	REV.	A	PART NAME	IMOPXLU.FCT. EXPLODED VIEW	FIRST ANGLE PROJECTION
		CONNIE	UNIT	mm	PART NO	IMOPXLU.FCT.7	SIZE
SHEET OF	DATE	20/Dec/2019	SCALE		PROJECT		A4

Revision	Description	Revised	Date
A	FIRST RELEASE	CONNIE	20/Dec/2019

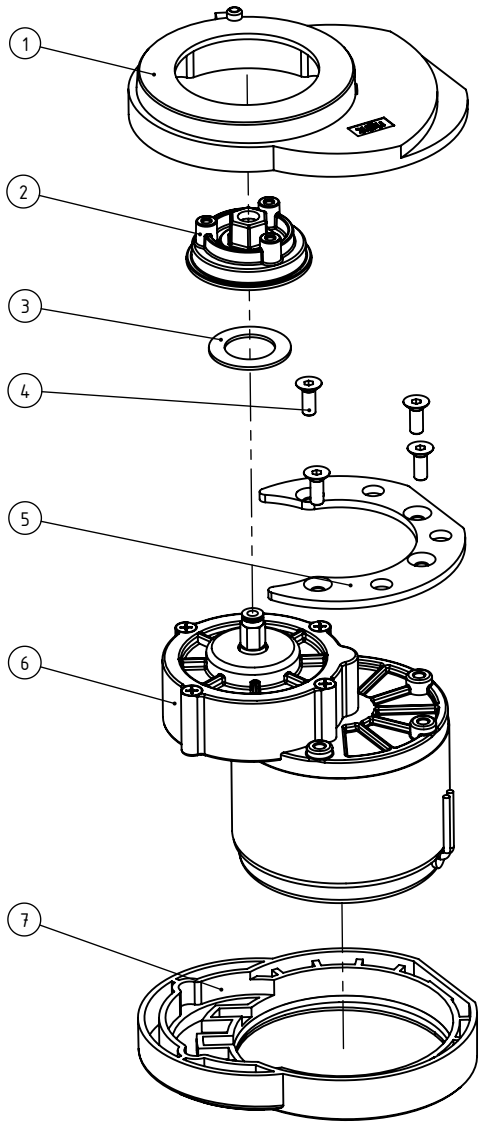

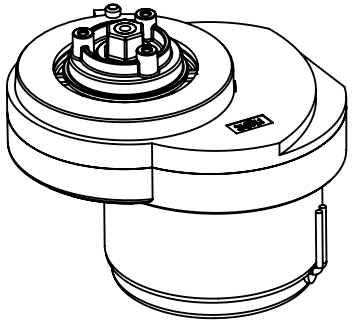

Item	P/N	Description	Qty.
	S.72.0000.1R	ASSY BRUSH MOTOR RIGHT (Ver1)	
1	72.0007.1	BRUSH MOTOR SUPPORT SUPPORT RUBBER RIGHT (MCH 1416-1001-2101)	1
2	72.0005.357/C	DRIVING WHEEL TOP WITH METAL INSERT (VER.1)	1
3	72.0004.0	FELT BRUSH MOTOR (MCH 1416-1001-2183)	1
4	72.0002.0N	NYLOK SCREW COUNTER SUNK BOLT M6X16 (MCH 1416-1001-2104)	4
5	72.0001.1	BRUSH MOTOR CONSTRUCTION RING RIGHT (MCH 1416-1001-2007)	1
6	72.0000.1MR	BRUSH MOTOR HELICAL GEARS RIGHT (MCH 1416-1001-2005)	1
7	72.0006.1/A	BRUSH MOTOR FIXATION CONDUCTIVE RUBBER RIGHT	1
8	72.0108.0 NO SHOW	LOCKTITE 222	0.02
9	89.0469.2099.01 NO SHOW	SERTAL NO. BRUSH MOTOR RIGHT	1

TOLERANCES UNSPECIFIED			
LINE		ANGLE	
.xxx	±0.005	x	±2°
.xx	±0.05	.x	±1.5°
.x	±0.1	.xx	±1°
.	±0.2	.xxx	±0.5°
xx	±0.5		
xxx	±1		

REMARK: –

MATERIAL: –

SMT-FCT DONGGUAN
THE FRIENDLY FAMILY
东莞硕能塑胶模具有限公司
ASSEMBLY AND MOULDING OF CLEANING

APPROVED	CHECKED	DISGNED	REV.	A	PART NAME	IMOPXLU.FCT.7 EXPLODED VIEW	FIRST ANGLE PROJECTION
		CONNIE	UNIT	mm	PART NO	IMOPXLU.FCT.7	SIZE
SHEET OF	DATE	20/Dec/2019	SCALE		PROJECT		A4

Revision	Description	Revised	Date
A	FIRST RELEASE	CONNIE	20/Dec/2019

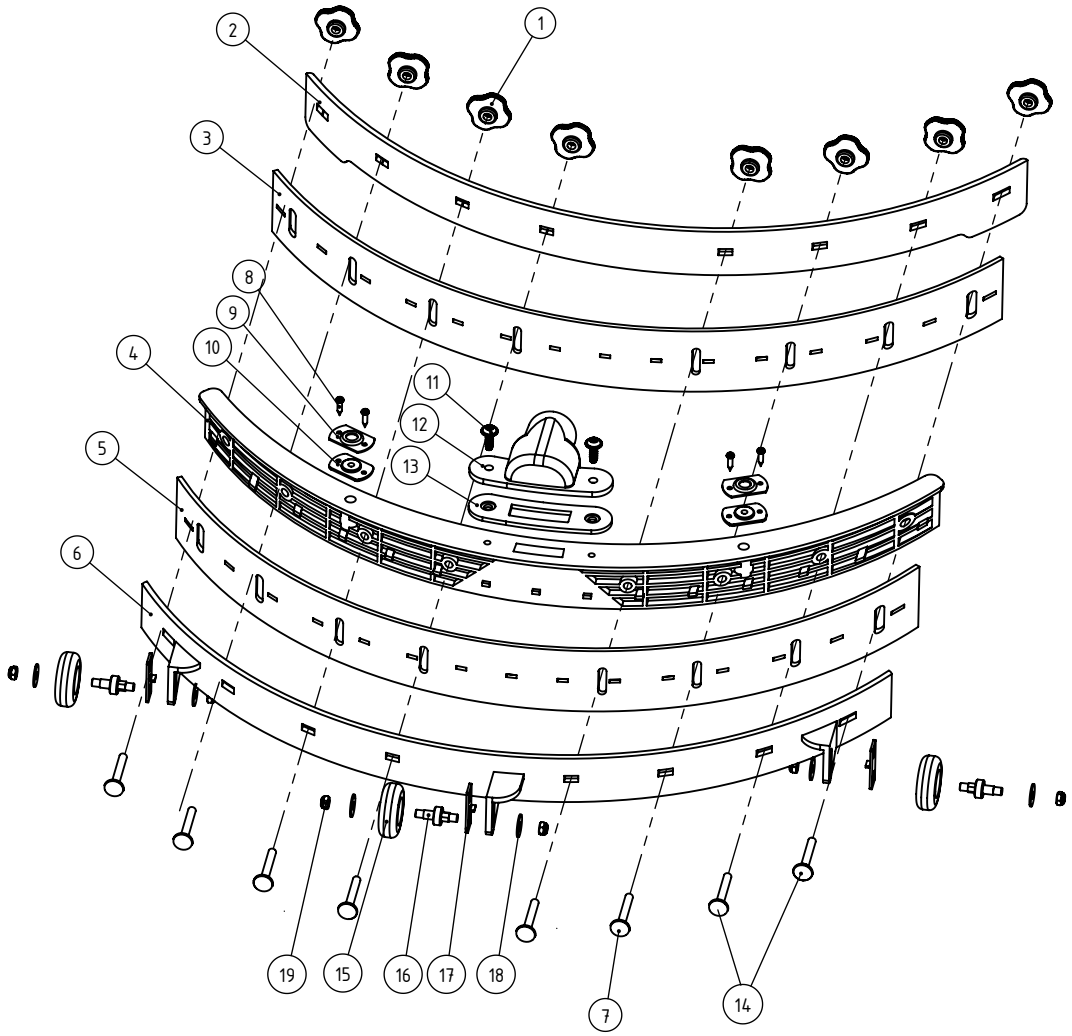

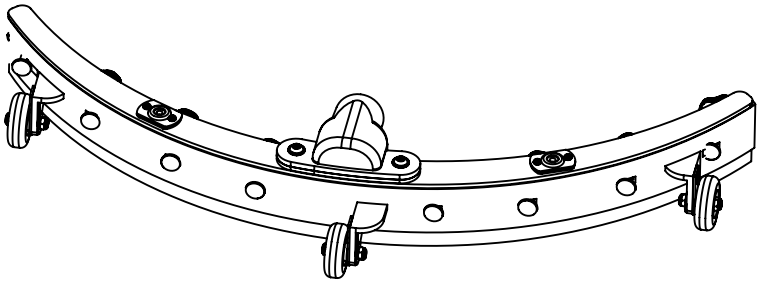

Item	P/N	Description	Qty.
	S.72.0096.5	SQUEEGEE ASSEMBLY	
1	72.0135.0	PLASTIC NUT SQUEEGEE	8
2	72.0097.0	SQUEEGEE FRONT PLATE [MCH 1416-1001-2068]	1
3	72.0099.3A	SQUEEGEE RUBBER XL FRONT *AIROFLEX*PU BLUE	1
4	72.0098.0	SQUEEGEE TOP PLATE [MCH 1416-1001-2069]	1
5	72.0100.3B	SQUEEGEE RUBBER XL REAR *PRIMOTHANE* PU BLUE	1
6	72.0096.0	SQUEEGEE REAR PLATE [WHEEL SIDE]	1
7	72.0136.0	M5 SCREW BOLT, THREAD LENGTH 35	4
8	85.1008.1	SCREW M3 X12 CROSSHEAD SELFTAPPING BL-NI,SST	4
9	72.0340.0A	FIXATION PLATE SQUEEGEE PIN STAINLESS STEEL	2
10	72.0200.0/D	RUBBER WASHER FIXATION SQUEEGEE PIN BLACK Thickness:2.5MM	2
11	72.0026.0	SCREW WN 5451 50X14 EJOT DELTA PT	2
12	72.0103.8/C	SQUEEGEE HOSE CONNECTOR -UP YELLOW PP[C]	1
13	72.0102.0/A	SQUEEGEE HOSE CONNECTOR-SEALING GASKET	1
14	72.0136.1	M5 SCREW BOLT, THREAD LENGTH 30	4
15	72.0238.0	SQUEEGEE CASTOR BLACK DIA.8MM RYTON R7	3
16	72.0137.2	SHAFT SQEEGEE CASTOR DIA.8MM	3
17	72.0138.1	HEIGHT ADJUSTMENT PLATE [Ver1]	3
18	72.0235.0	M5 WASHER STAINLESS STEEL 5X15X1MM	6
19	04.0048.0	NUT M5 NYLON	6

TOLERANCES UNSPECIFIED			
LINE		ANGLE	
.xxx	±0.005	x	±2°
.xx	±0.05	.x	±1.5°
.x	±0.1	.xx	±1°
.	±0.2	.xxx	±0.5°
xx	±0.5		
xxx	±1		

REMARK: –

MATERIAL: –

SMT-FCT DONGGUAN
THE FRIENDLY FAMILY
东莞硕能塑胶模具有限公司
ASSEMBLY AND MOULDING OF CLEANING

APPROVED	CHECKED	DISGNED	REV.	A	PART NAME	IMOPXLU.FCT.7 EXPLODED VIEW	FIRST ANGLE PROJECTION
		CONNIE	UNIT	mm	PART NO	IMOPXLU.FCT.7	SIZE
SHEET OF	DATE	20/Dec/2019	SCALE		PROJECT		A4

Revision	Description	Revised	Date
A	FIRST RELEASE	CONNIE	20/Dec/2019

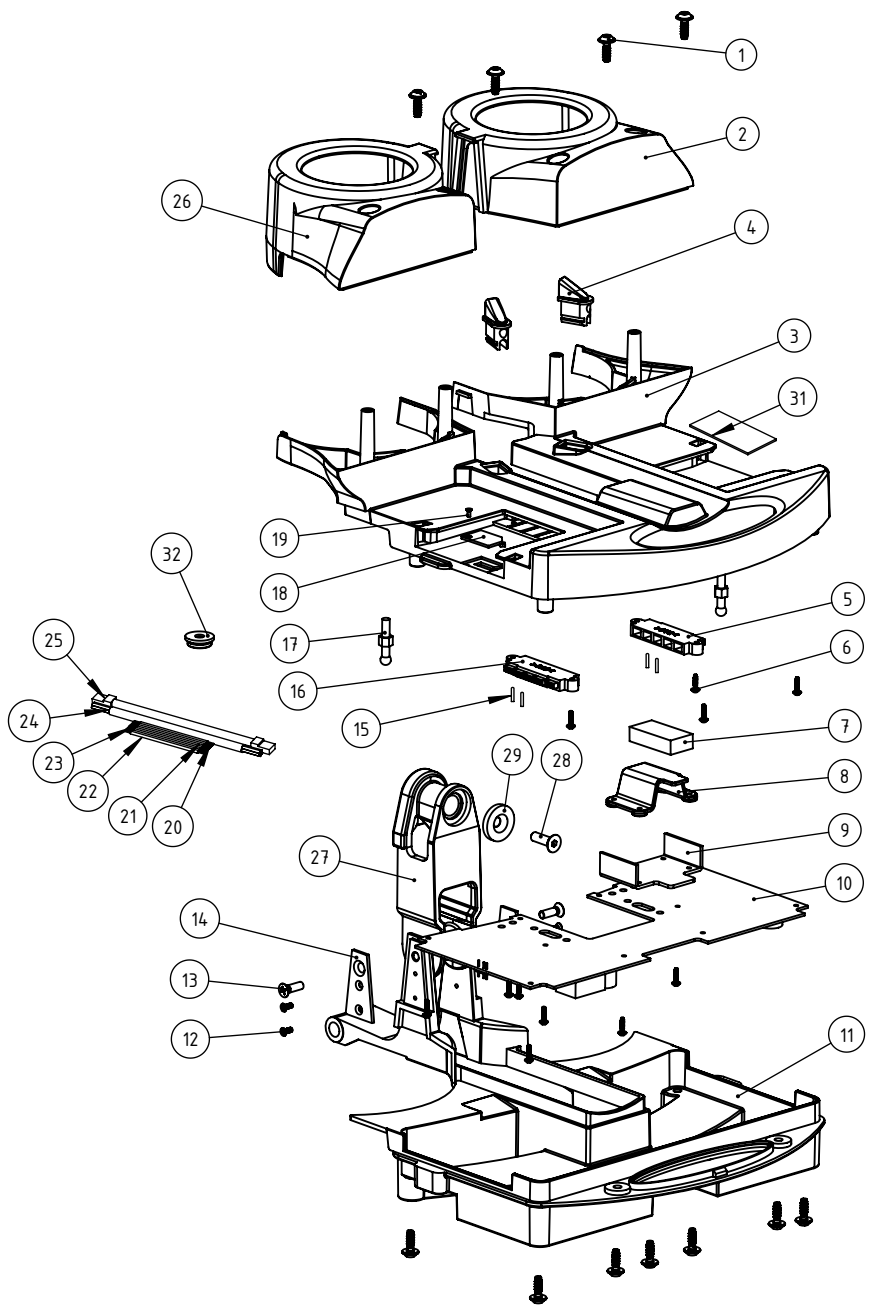

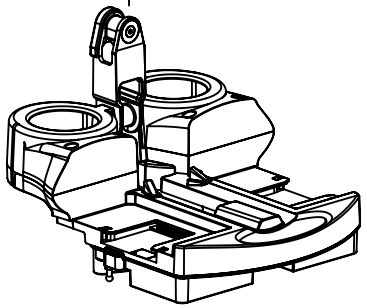

Item	P/N	Description	Qty.
	S.72.0065.01	ASSY MAIN LEVER UNIT IMOPXL MERCURY SWITCH CATAFORESE BLAC	
1	72.0026.0	SCREW WN 5451 50X14 EJOT DELTA PT (MCH 1416-1001-2004)	12
2	72.0072.2	BRUSH WOTOR COOLING COVER RIGHT (MCH 1416-1001-2153), KLEUR	1
3	72.0065.2A	MAIN LEVER COVER	1
4	72.0069.0A	PCB MACHINE SEAL	2
5	72.0068.357	BATTERY CONNECTOR MALE Left:Blue, Right:Grey, Kleur: Grey	1
6	72.0057.0	SCREW WN 5451 25X10 EJOT DELTA PT (MCH 1416-1001-2150)	18
7	72.0051.0	MAGNET TOP UNIT 40X20X10mm (MCH 1416-1001-2044)	1
8	72.0067.357	MAGNET TOP UNIT HOLDER (MCH 1416-1001-2192), JKEYR: GREY.357	1
9	72.0219.0	STEEL COVER ISOLATION MAGNETIC T=3mm	1
10	72.0418.0	MAIN PCB IMOP WITH CUT-OFF SWITCH	1
11	72.0010.00	MAIN LEVER HOUSING CATEFORESE TREATMENT	1
12	72.0012.1N	NYLOK COUNTER SUNK BOLT M3X8, SST	4
13	72.0028.0N	NYLOK SCREW COUNTER SUNK BOLT M5X16	2
14	72.0011.00	MAIN LEVER SUPPORT PLATE CATEFORESE TREATMENT	2
15	85.0050.1	ALIGNMENT PIN LONGER VERSION	4
16	72.0068.797	BATTERY CONNECTOR MALE LEFT: BLUE, RIGHT: GERY, KLEUR: BLUE	1
17	72.0071.0	SQUEEGEE FIXATION PIN (MCH 1416-1001-2158)	2
18	72.0164.2	COVER USB UPDATE SLOT, KLEUR: WHITE .2	1
19	72.0165.0	SCREW COUNTE SUNK M1.7X6	1
20	72.0123.0/A	MALE CONNECTOR + WIRES 18AWG RED 270MM	2
21	72.0124.0/A	MALE CONNECTOR + CONNECTOR WIRES 18AWG BLACK 270MM	2
22	72.0157.0/A	WIRES FOR BRUSH UNIT 14AWG BLACK ANGLE TERMINAL L=280mm	2
23	72.0157.1/A	WIRES FOR BRUSH UNIT 14AWG RED ANGLE TERMINAL L=280mm	2
24	72.0126.0B	POWER CABLE 3 WIRES ANGLE TERMINALS [1.5MM 2 L=630MM]	1
25	72.0125.0F	UTP CABLE (GLASS+FIBRE) RJ45 <> YH2.0-8P CONNECTOR L=60C	1
26	72.0073.2	BRUSH MOTOR COOLING COVER LEFT [MCH 1416-1001-2154], Kleur:	1
27	S.72.0018.00	ASSY HINGE CARDAN | CATAFORESE BLACK	1
28	72.0033.2	COUNTER SUNK HEAD CAP SCREW M6X20 WITH NYLOK SCREW	1
29	72.0058.1	CARDAN DISK [Ver1]	1
30	72.0222.0 NO SHOW	PET SHEET ONE SIDE 3M GLUE T=0.04MM	4
31	89.0467.2099.10	STICKER IMOP [STRONG MAGNAETS] [B]	1
32	72.0246.0	SEALING RING SIGAR UTP CONNECTOR	1

TOLERANCES UNSPECIFIED			
LINE		ANGLE	
.xxx	±0.005	x	±2°
.xx	±0.05	.x	±1.5°
.x	±0.1	.xx	±1°
.	±0.2	.xxx	±0.5°
xx	±0.5		
xxx	±1		

REMARK: –

MATERIAL: –

SMT-FCT DONGGUAN
THE FRIENDLY FAMILY
东莞硕能塑胶模具有限公司
ASSEMBLY AND MOULDING OF CLEANING

APPROVED	CHECKED	DISGNED	REV.	A	PART NAME	IMOPXLU.FCT.7 EXPLODED VIEW	FIRST ANGLE PROJECTION
		CONNIE	UNIT	mm	PART NO	IMOPXLU.FCT.7	SIZE
SHEET 1 OF 1	DATE	20/Dec/2019	SCALE		PROJECT		A4

Revision	Description	Revised	Date
A	FIRST RELEASE	CONNIE	20/Dec/2019

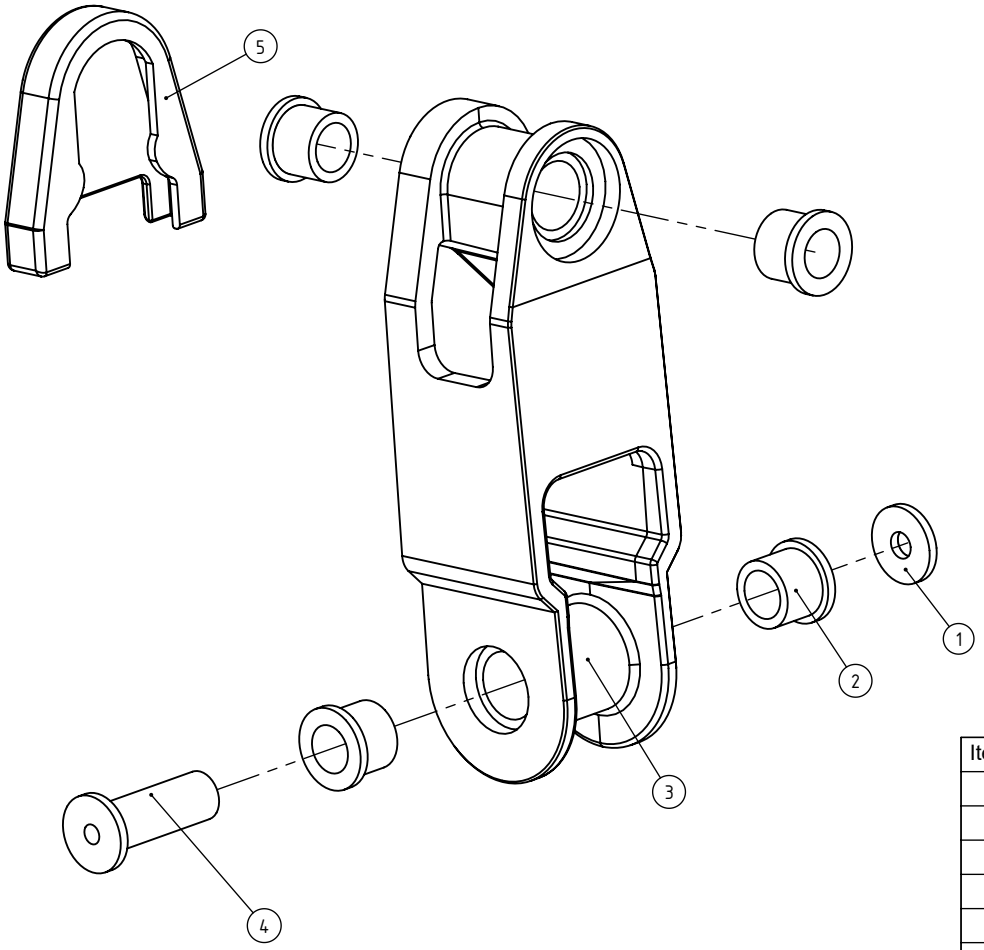

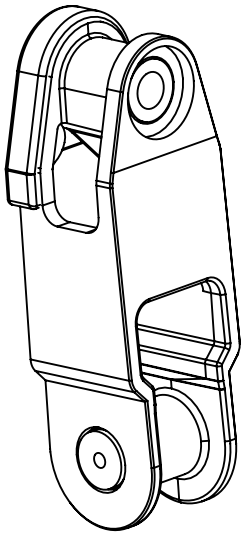

Item	P/N	Description	Qty.
	S.72.0018.00	ASSY HINGE CARDAN | CATAFORESE BLACK	
1	72.0020.0	WASHER AZIS MAIN LEVER (MCH 1416-1001-2116)	1
2	72.0016.0	BRUSHING AXIS 10 (MCH 1416-1001-2112)	4
3	72.0018.00	HINGE CARDAN TOP UNIT CATEFORESE TREATMENT	1
4	72.0019.0D	HINGE AXIS MAIN LEVER STAINLESS STEEL	1
5	72.0311.357	COVER HINGE SCREW, KLEUR: GREY .357 (P431C)	1

TOLERANCES UNSPECIFIED			
LINE		ANGLE	
.xxx	±0.005	x	±2°
.xx	±0.05	.x	±1.5°
.x	±0.1	.xx	±1°
.	±0.2	.xxx	±0.5°
xx	±0.5		
xxx	±1		

REMARK: –

MATERIAL: –

SMT-FCT DONGGUAN
THE FRIENDLY FAMILY
东莞硕能塑胶模具有限公司
ASSEMBLY AND MOULDING OF CLEANING

APPROVED	CHECKED	DISGNED	REV.	A	PART NAME	IMOPXLU.FCT.7 EXPLODED VIEW	FIRST ANGLE PROJECTION
		CONNIE	UNIT	mm	PART NO	IMOPXLU.FCT.7	SIZE
SHEET 1 OF 1	DATE	20/Dec/2019	SCALE	1:1	PROJECT		A4

Revision	Description	Revised	Date
A	FIRST RELEASE	CONNIE	20/Dec/2019

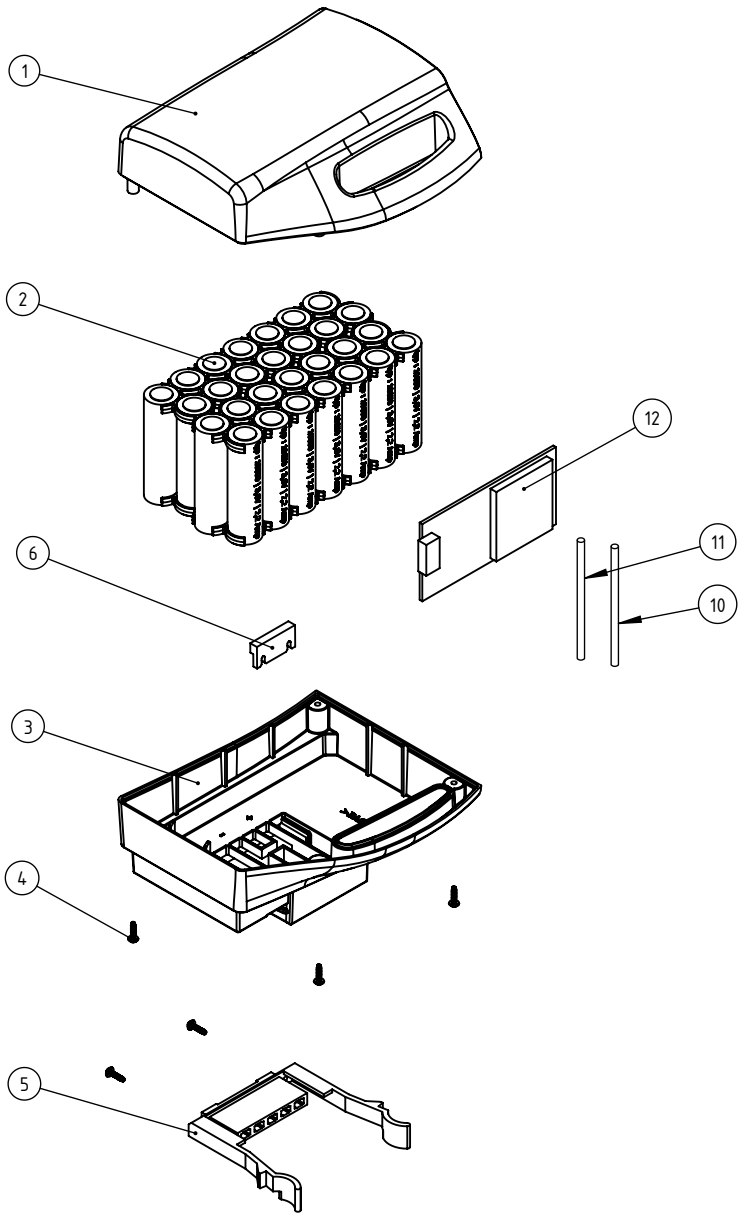

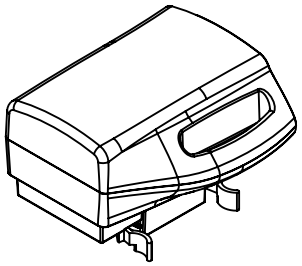

Item	P/N	Description	Qty.
	S.72.0079.357BSRA	ASSY BATTERY PACK GREY [RIGHT] BMS 14Ah [FR][W/O FUSE]	
1	72.0132.357R	BATTERY PACK HOUSING TOP RIGHT GREY [FIRE RESISTANT]	1
2	72.0131.1/C	BATTERY PACK CELLS WITH BMS [14Ah][W/O FUSE]	1
3	72.0079.357R	BATTERY PACK HOUSING BOTTOM RIGHT [FR]	1
4	72.0057.0	SCREW WN 5451 25X10 EJOT DELATA PT (MCH 1416-1001-2150)	6
5	72.0075.357	BATTERY CONNECTOR FEMALE, GREY, RIGHT (P431C)	1
6	72.0218.0	LIMITATION BLOCK FEMALE CONNECTOR	1
7	72.0170.0 NO SHOW	BUBBLE WRAP BAG 250x210	1
8	89.0469.2099.05 NO SHOW	SERIAL NO. BATTERY	1
9	89.0469.2099.07BM NO SHOW	STICKER SAFETY ADVISE FOR BATTERY RIGHT BMS	1
10	72.0129.0	BATTERY CONNECTOR + WIRES 14AWG, RED, L=250mm	1
11	72.1030.0	BATTERY CONNECTOR + WIRES 14AWG, BLACK, L=250mm	1
12	72.0284.0	BMS BOARD IMOP BATTERY	1

TOLERANCES UNSPECIFIED			
LINE		ANGLE	
.xxx	±0.005	x	±2°
.xx	±0.05	.x	±1.5°
.x	±0.1	.xx	±1°
.	±0.2	.xxx	±0.5°
xx	±0.5		
xxx	±1		

REMARK: –

MATERIAL: –

SMT-FCT DONGGUAN
THE FRIENDLY FAMILY
东莞硕能塑胶模具有限公司
ASSEMBLY AND MOULDING OF CLEANING

APPROVED	CHECKED	DISGNED	REV.	A	PART NAME	IMOPXLU.FCT.7 EXPLODED VIEW	FIRST ANGLE PROJECTION
		CONNIE	UNIT	mm	PART NO	IMOPXLU.FCT.7	SIZE
SHEET OF	DATE	20/Dec/2019	SCALE	1:1	PROJECT		A4

Revision	Description	Revised	Date
A	FIRST RELEASE	CONNIE	20/Dec/2019

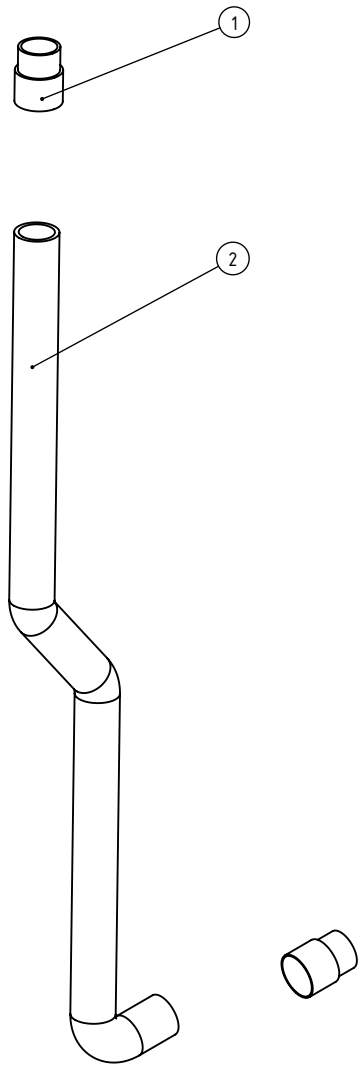

Item	P/N	Description	Qty.
	S.72.0094.0	STRETCH HOSE COMPLETE	
1	72.0095.8	STRETCH HOSE CUFF YELLOW	2
2	72.0094.0	STRETCH HOSE TOP UNIT [MCH 1416-1001-2098]	1

TOLERANCES UNSPECIFIED

LINE		ANGLE	
.xxx	±0.005	x	±2°
.xx	±0.05	.x	±1.5°
.x	±0.1	.xx	±1°
.	±0.2	.xxx	±0.5°
xx	±0.5		
xxx	±1		

REMARK: –

MATERIAL: –

SMT-FCT DONGGUAN
THE FRIENDLY FAMILY
东莞硕能塑胶模具有限公司
ASSEMBLY AND MOULDING OF CLEANING

APPROVED	CHECKED	DISGNED	REV.	A	PART NAME	IMOPXLU.FCT.7 EXPLODED VIEW	FIRST ANGLE PROJECTION
		CONNIE	UNIT	mm	PART NO	IMOPXLU.FCT.7	SIZE
SHEET 1 OF 1	DATE	20/Dec/2019	SCALE		PROJECT		A4

Revision	Description	Revised	Date
A	FIRST RELEASE	CONNIE	20/Dec/2019

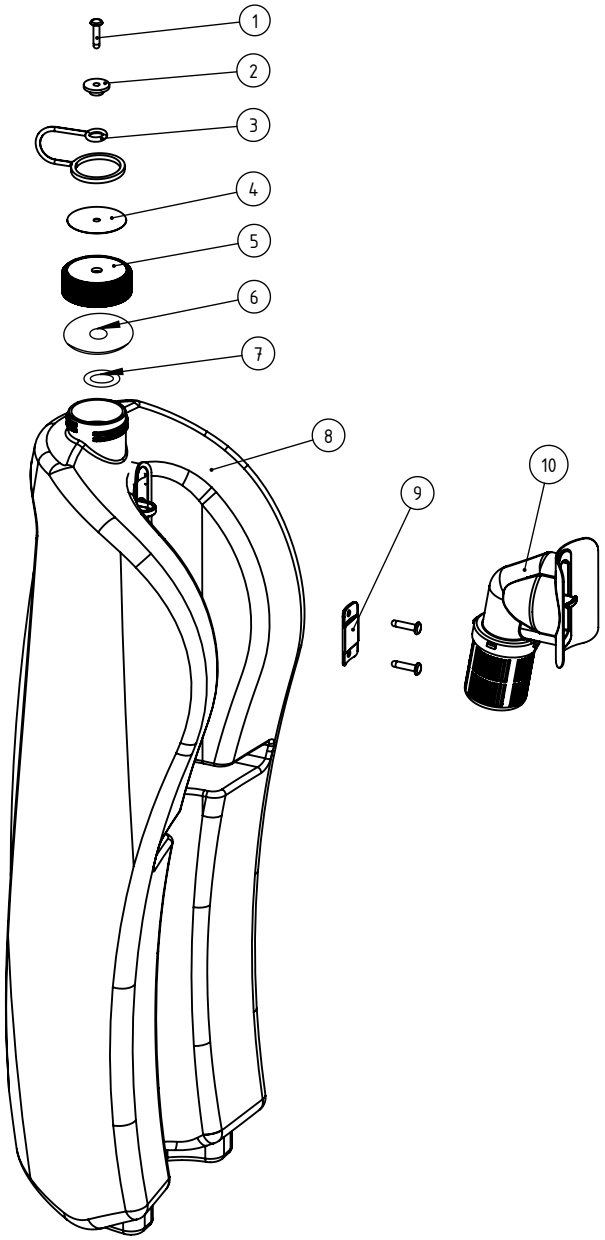

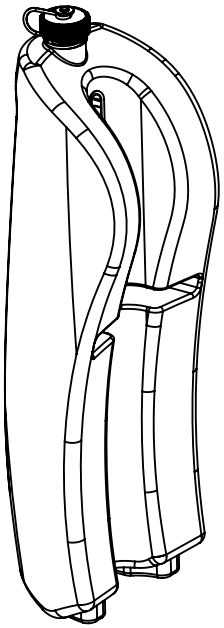

Item	P/N	Description	Qty.
	S.72.0088.2A	WHITE DIRT COMPARTMENT, CAP VERSION, TRANSPARENT LINE	
1	54.0029.0	BLIND REVIT NAIL 4X15mmg	3
2	72.0254.0	SLEEVE CAP HOLDER	1
3	72.0252.0	CAP HOLDER	4
4	89.0469.2099.25A	WARNING PLATE ON DIRTY TANK ROUND STAINLESS PLATE 4.5mm	1
5	72.0264.357	CAP WITHOUT HOLE COLOR: GREY (P431C)	1
6	72.0265.0	SEALING GASKET CAP DIRTY TANK	1
7	72.0271.0	PLASTIC WASHER 9x4x1mm	1
8	72.0088.2	WHITE DIRT COMPARTMENT, CAP VERSION	1
9	72.0089.0	FIXATION PLATE DIRT COMPARTMENT (MCH 1416-1001-2171)	1
10	S.72.0407.8	ASSY FLOAT BALL	1

TOLERANCES UNSPECIFIED			
LINE		ANGLE	
.xxx	±0.005	x	±2°
.xx	±0.05	.x	±1.5°
.x	±0.1	.xx	±1°
.	±0.2	.xxx	±0.5°
xx	±0.5		
xxx	±1		

REMARK: –

MATERIAL: –

SMT-FCT DONGGUAN
THE FRIENDLY FAMILY
东莞硕能塑胶模具有限公司
ASSEMBLY AND MOULDING OF CLEANING

APPROVED	CHECKED	DISGNED	REV.	A	PART NAME	IMOPXLU.FCT.7 EXPLODED VIEW	FIRST ANGLE PROJECTION
		CONNIE	UNIT	mm	PART NO	IMOPXLU.FCT.7	SIZE
SHEET OF	DATE	20/Dec/2019	SCALE	1:1	PROJECT		A4

Revision	Description	Revised	Date
A	FIRST RELEASE	CONNIE	20/Dec/2019

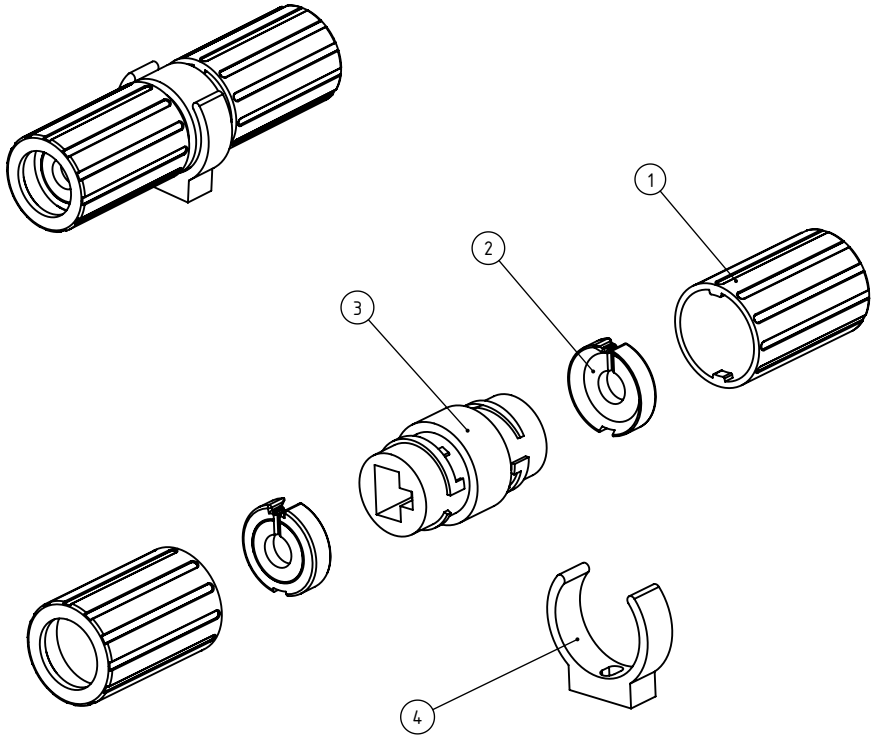

Item	P/N	Description	Qty.
	S.72.0243.0	ASSEMBLY SIGAR UTP CONNECTOR	1
1	72.0244.797/A	COVER UTP CONNECTOR JOINT COLOR: BLUE (P312C) (A)	2
2	72.0245.797	SUPPORT PLATE SIGAR UTP CONNECTOR COLOR: BLUE (P312C)	2
3	72.0243.0	SIGAR UTP CONNECTOR	1
4	72.0247.0/A	CLIP PLASTIC IN WHIRE WIDTH: 7mm	1

TOLERANCES UNSPECIFIED

LINE		ANGLE	
.xxx	±0.005	x	±2°
.xx	±0.05	.x	±1.5°
.x	±0.1	.xx	±1°
.	±0.2	.xxx	±0.5°
xx	±0.5		
xxx	±1		

SHEET OF | DATE

REMARK: –

MATERIAL: –

SMT-FCT DONGGUAN
THE FRIENDLY FAMILY
东莞硕能塑胶模具有限公司
ASSEMBLY AND MOULDING OF CLEANING

APPROVED	CHECKED	DISGNED	REV.	A	PART NAME	IMOPXLU.FCT.7 EXPLODED VIEW	FIRST ANGLE PROJECTION
		CONNIE	UNIT	mm	PART NO	IMOPXLU.FCT.7	SIZE
		20/Dec/2019	SCALE		PROJECT		A4

Revision	Description	Revised	Date
A	FIRST RELEASE	CONNIE	20/Dec/2019

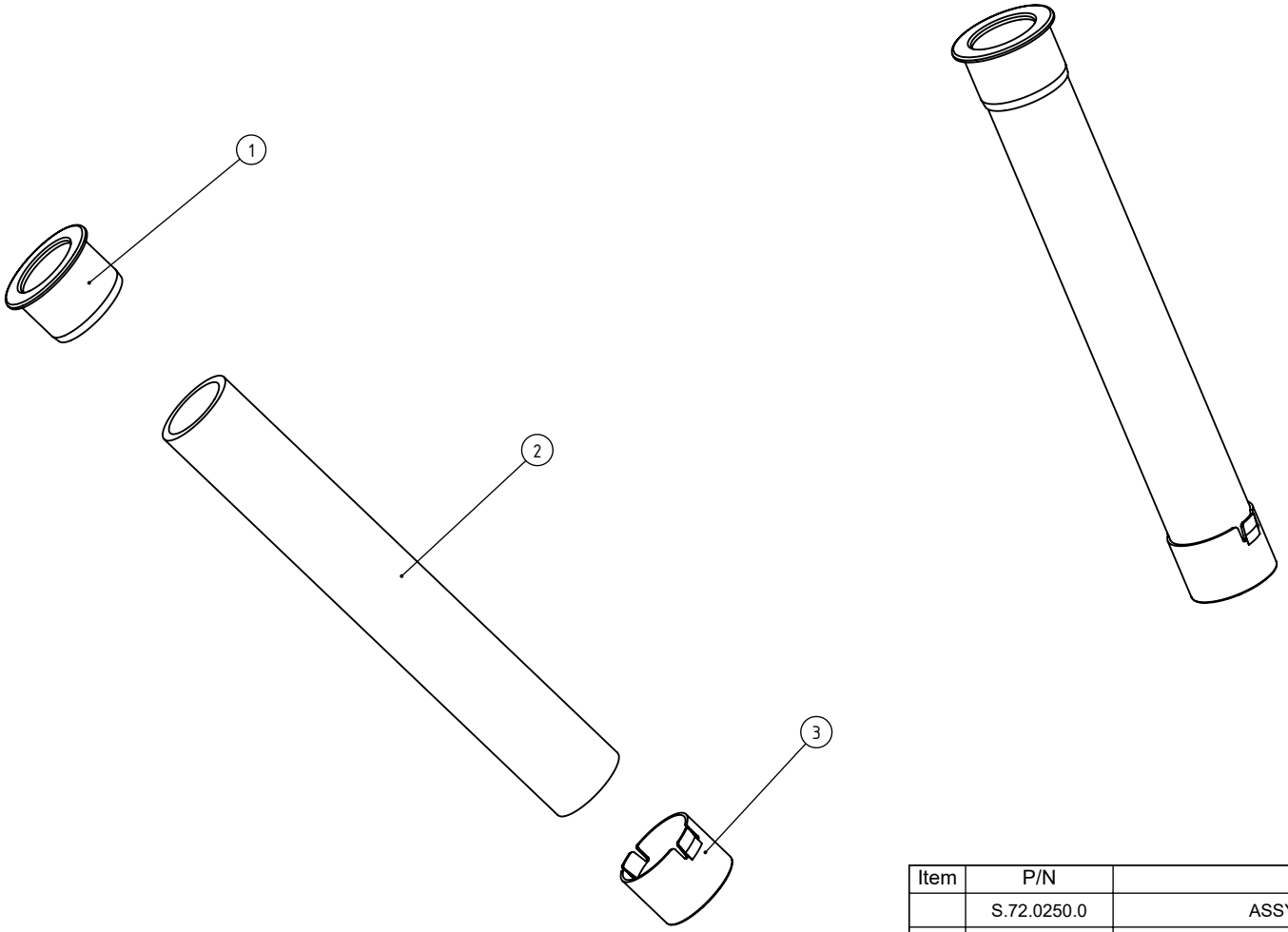

Item	P/N	Description	Qty.
	S.72.0250.0	ASSY FILLING HOSE FOR IMOP 30CM	
1	72.0250.1	ADAPTOR OF IMPUT HOSE OUTSIDE	1
2	72.0250.0	FILLING HOSE FOR IMOP 30CM	1
3	72.0250.2	ADAPTOR OF IMPUT HOSE INSIDE	1

TOLERANCES UNSPECIFIED			
LINE		ANGLE	
.xxx	±0.005	x	±2°
.xx	±0.05	.x	±1.5°
.x	±0.1	.xx	±1°
.	±0.2	.xxx	±0.5°
xx	±0.5		
xxx	±1		

REMARK: –

MATERIAL: –

SMT-FCT DONGGUAN
THE FRIENDLY FAMILY
东莞硕能塑胶模具有限公司
ASSEMBLY AND MOULDING OF CLEANING

APPROVED	CHECKED	DISGNED	REV.	A	PART NAME	IMOPXLU.FCT.7 EXPLODED VIEW	FIRST ANGLE PROJECTION
		CONNIE	UNIT	mm	PART NO	IMOPXLU.FCT.7	SIZE
SHEET OF	DATE	20/Dec/2019	SCALE		PROJECT		A4